Data Sheet | Item Number: 2202-1403

4-conductor through terminal block; with push-button; 2.5 mm²; with test port; suitable for Ex e II applications; side and center marking; for DIN-rail 35 x 15 and 35 x 7.5; Push-in CAGE CLAMP®; 2,50 mm²; red

https://www.wago.com/2202-1403

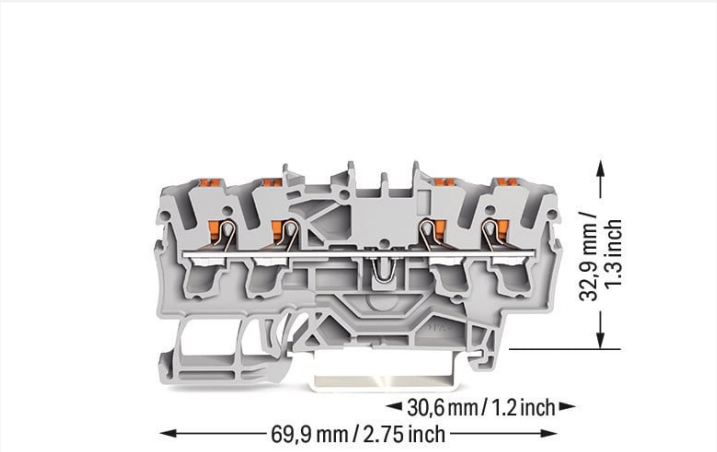

Color: red

Similar to illustration

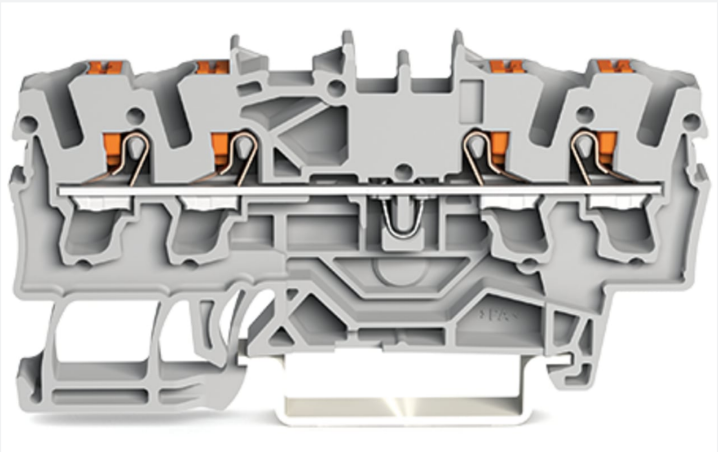

Similar to illustration

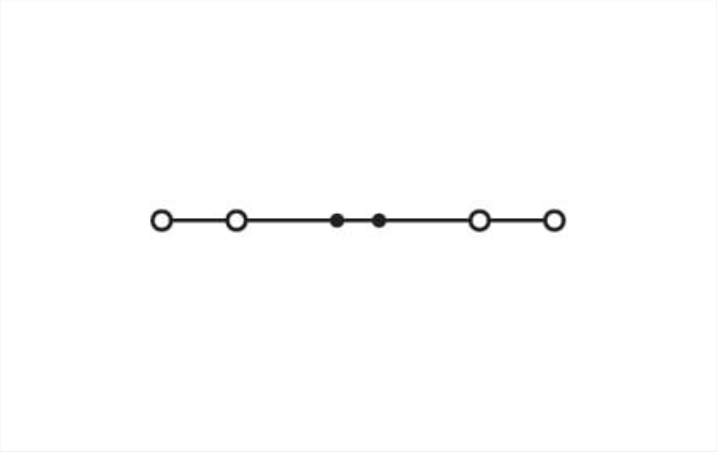

Similar to illustration

Through terminal block, 2202 Series, red

Our through terminal block (item number 2202-1403) makes connections quick and easy. Whether for industrial or building applications, you can use our through terminal blocks to connect electrical conductors quickly and safely. We offer variants for both classic through-wiring and potential distribution. This through rail-mount terminal block has a rated voltage of 800 V and can handle currents up to 24 A. Ensure that the strip lengths are between 10 mm and 12 mm when connecting conductors to this through terminal block. This product incorporates conductor terminals and utilizes Push-in CAGE CLAMP®. Our Push-in CAGE CLAMP® is a universal, maintenance-free connection solution for all conductor types, boasting a key feature: both solid and fine-stranded conductors with ferrules can be directly inserted without the need for tools or any preparation, such as crimping the ferrule. The item's dimensions are 5.2 x 69.9 x 39.5 mm (width x height x depth). This through terminal block is suitable for conductor cross sections ranging from 0.25 mm² to 4 mm². It features one level and four clamping points for connecting a single potential. The red housing is made of polyamide (PA66) for insulation. A push-button is used to operate this through rail-mount terminal block. Our TOPJOB® S rail-mount terminal blocks are perfect for a wide range of industrial applications and modern building installations as they provide secure electrical connections. You can work anywhere in the world and on any application with just a single rail-mount terminal block system. These through rail-mount terminal blocks are mounted using DIN-35 rails.. The front-entry wiring allows you to connect copper conductors. The two jumper slots enable potential distribution to other clamping points. This product is designed for specific Ex applications (please refer to the product datasheet).

Electrical data

Ratings per	IEC/EN 60947-7-1		
Overvoltage category	III	III	II
Pollution degree	3	2	2
Nominal voltage	800 V	-	-
Rated surge voltage	8 kV	-	-
Rated current	24 A	-	-

Ratings per	IEC/EN 60947-7-1		
Current at conductor cross-section (max.) mm²	32 A	-	-

Continued on next page

Approvals per	UL 1059		
Use group	B	C	D
Rated voltage	600 V	600 V	-
Rated current	20 A	20 A	-

Approvals per	CSA 22.2 No 158		
Use group	B	C	D
Rated voltage	600 V	600 V	-
Rated current	20 A	20 A	-

Ex information

Reference hazardous areas	See "Downloads – Documentation – Additional Information: Technical Section; Technical Explications"
Ratings per	ATEX: PTB 18 ATEX 1005 U / IECEx: PTB 18.0012U (Ex eb IIC Gb)
Rated voltage EN (Ex e II)	550 V
Rated current (Ex e II)	22 A
Rated current (Ex e II) with jumper	20 A

Power Loss

Power loss, per pole (potential)	0.7661 W
Rated current I_N for specified power loss	24 A
Resistance value for specified, current-dependent power loss	0.00133 Ω

Connection data

Clamping units	4
Total number of potentials	1
Number of levels	1
Number of jumper slots	2

Connection 1

Connection technology	Push-in CAGE CLAMP®
Actuation type	Push-button
Connectable conductor materials	Copper
Nominal cross-section	2.5 mm²
Solid conductor	0.25 … 4 mm² / 22 … 12 AWG
Solid conductor; push-in termination	0.75 … 4 mm² / 18 … 12 AWG
Fine-stranded conductor	0.25 … 4 mm² / 22 … 12 AWG
Fine-stranded conductor; with insulated ferrule	0.25 … 2.5 mm² / 22 … 14 AWG
Fine-stranded conductor; with ferrule; push-in termination	1 … 2.5 mm² / 18 … 14 AWG
Note (conductor cross-section)	Depending on the conductor characteristic, a conductor with a smaller cross-section can also be inserted via push-in termination.
Strip length	10 … 12 mm / 0.39 … 0.47 inches
Wiring direction	Front-entry wiring

Physical data

Width	5.2 mm / 0.205 inches
Height	69.9 mm / 2.752 inches
Depth from upper-edge of DIN-rail	32.9 mm / 1.295 inches
Depth	39.5 mm / 1.555 inches

Mechanical data

Mounting type	DIN-35 rail
Marking level	Center/side marking

 Continued on next page

Material data

Note (material data)	Information on material specifications can be found here
Color	red
Material group	I
Insulation material (main housing)	Polyamide (PA66)
Flammability class per UL94	V0
Fire load	0.032 MJ
Actuator color	orange
Weight	7.8 g

Environmental requirements

Processing temperature	-35 … +85 °C
Continuous operating temperature	-60 … +105 °C

Environmental Testing (Environmental Conditions)

Test specification Railway applications – Rolling stock – Electronic equipment	DIN EN 50155 (VDE 0115-200):2022-06
Test procedure Railway applications – Rolling stock equipment – Shock and vibration tests	DIN EN 61373 (VDE 0115-0106):2011-04
Spectrum/Installation location	Service life test, Category 1, Class A/B
Function test with noise-like vibration	Test passed according to Section 8 of the standard
Frequency	f_1 = 5 Hz to f_2 = 150 Hz f_1 = 5 Hz to f_2 = 150 Hz
Acceleration	0.101g (highest test level used for all axes) 0.572g (highest test level used for all axes) 5g (highest test level used for all axes)
Test duration per axis	10 min. 5 h
Test directions	X, Y and Z axes X, Y and Z axes X, Y and Z axes
Monitoring for contact faults/interruptions	Passed
Voltage drop measurement before and after each axis	Passed
Simulated service life test through increased levels of noise-like vibration	Test passed according to Section 9 of the standard
Extended test scope: Monitoring for contact faults/interruptions	Passed Passed
Extended test scope: Voltage drop measurement before and after each axis	Passed Passed
Shock test	Test passed according to Section 10 of the standard
Shock form	Half sine
Shock duration	30 ms
Number of shocks per axis	3 pos. und 3 neg.
Vibration and shock stress for rolling stock equipment	Passed

 Continued on next page

Commercial data

ETIM 9.0	EC000897
ETIM 8.0	EC000897
PU (SPU)	100 pcs
Packaging type	Box
Country of origin	DE
GTIN	4055143852074
Customs tariff number	85369010000

Environmental Product Compliance

RoHS Compliance Status	Compliant,No Exemption

Approvals / Certificates

General approvals

Approval	Standard	Certificate Name
CCA DEKRA Certification B.V.	EN 60947	NTR NL-7950
KEMA/KEUR DEKRA Certification B.V.	EN 60947	71-124827
UL Underwriters Laboratories Inc.	UL 1059	UL-CA-L45172-6189178-11508102-1

Declarations of conformity and manufacturer's declarations

Approval	Standard	Certificate Name
ATEX-Attestation of Conformity WAGO GmbH & Co. KG	-	-
EU-Declaration of Conformity WAGO GmbH & Co. KG	-	-
Railway WAGO GmbH & Co. KG	-	Z00004404.000
UK-Declaration of Conformity WAGO GmbH & Co. KG	-	-

Approvals for marine applications

Approval	Standard	Certificate Name
ABS American Bureau of Shipping	-	19-HG1866350-PDA
BV Bureau Veritas S.A.	IEC 60947	58186/A0 BV
DNV GL Det Norske Veritas, Germanischer Lloyd	-	TAE00003JT
LR Lloyds Register	-	19/20050

Approvals for hazardous areas

Approval	Standard	Certificate Name
AEx Underwriters Laboratories Inc.	UL 60079	E185892 (AEx eb IIC resp. Ex eb IIC)
ATEX Physikalisch Technische Bundesanstalt	IEC 60079-0	PTB 18 ATEX 1005 U (II 2 G Ex eb IIC Gb bzw. I M 2 Ex eb I Mb)
CCCEx CQST/CNEx	GB/T 3836.3	2020312313000169
IECEx Physikalisch Technische Bundesanstalt	IEC 60079	IECEx PTB 18.0012U (Ex eb IIC Gb and Ex eb I Mb)

 Continued on next page

Downloads

Environmental Product Compliance

Compliance Search

Environmental Product Compliance 2202-1403

Documentation

Additional Information

Technical Section	pdf 2246.92 KB	

CAD/CAE-Data

CAD data

2D/3D Models 2202-1403

CAE data

ZUKEN Portal 2202-1403

1 Compatible Products

1.1 Required Accessories

1.1.1 End plate

1.1.1.1 End plate

Item No.: 2002-1491
End and intermediate plate; 0.8 mm thick; gray

Item No.: 2002-1492
End and intermediate plate; 0.8 mm thick; orange

Item No.: 209-191
Separator for Ex e/Ex i applications; 3 mm thick; 120 mm wide; orange

1.2 Optional Accessories

1.2.1 DIN-rail

1.2.1.1 Mounting accessories

Item No.: 210-196
Aluminum carrier rail; 35 x 8.2 mm; 1.6 mm thick; 2 m long; unslotted; similar to EN 60715; silver-colored

Item No.: 210-198
Copper carrier rail; 35 x 15 mm; 2.3 mm thick; 2 m long; unslotted; according to EN 60715; copper-colored

Item No.: 210-508
Steel carrier rail; 35 x 15 mm; 1.5 mm thick; 2 m long; slotted; galvanized; similar to EN 60715; silver-colored

Item No.: 210-197
Steel carrier rail; 35 x 15 mm; 1.5 mm thick; 2 m long; slotted; similar to EN 60715; silver-colored

Item No.: 210-506
Steel carrier rail; 35 x 15 mm; 1.5 mm thick; 2 m long; unslotted; galvanized; similar to EN 60715; silver-colored

Item No.: 210-114
Steel carrier rail; 35 x 15 mm; 1.5 mm thick; 2 m long; unslotted; similar to EN 60715; silver-colored

Item No.: 210-118
Steel carrier rail; 35 x 15 mm; 2.3 mm thick; 2 m long; unslotted; according to EN 60715; silver-colored

Item No.: 210-115
Steel carrier rail; 35 x 7.5 mm; 1 mm thick; 2 m long; slotted; according to EN 60715; "Hole width 18 mm; silver-colored

Item No.: 210-112
Steel carrier rail; 35 x 7.5 mm; 1 mm thick; 2 m long; slotted; according to EN 60715; "Hole width 25 mm; silver-colored

Item No.: 210-504
Steel carrier rail; 35 x 7.5 mm; 1 mm thick; 2 m long; slotted; galvanized; according to EN 60715; silver-colored

Item No.: 210-113
Steel carrier rail; 35 x 7.5 mm; 1 mm thick; 2 m long; unslotted; according to EN 60715; silver-colored

Item No.: 210-505
Steel carrier rail; 35 x 7.5 mm; 1 mm thick; 2 m long; unslotted; galvanized; according to EN 60715; silver-colored

 Continued on next page

1.2.2 End plate

1.2.2.1 End plate

Item No.: 2002-1493
Seperator plate; 2 mm thick; oversized; gray

Item No.: 2002-1494
Seperator plate; 2 mm thick; oversized; orange

1.2.3 Ferrule

1.2.3.1 Ferrule

Item No.: 216-241
Ferrule; Sleeve for 0.5 mm² / 20 AWG; insulated; electro-tin plated; electrolytic copper; gastight crimped; acc. to DIN 46228, Part 4/09.90; white

Item No.: 216-242
Ferrule; Sleeve for 0.75 mm² / 18 AWG; insulated; electro-tin plated; electrolytic copper; gastight crimped; acc. to DIN 46228, Part 4/09.90; gray

Item No.: 216-262
Ferrule; Sleeve for 0.75 mm² / 18 AWG; insulated; electro-tin plated; electrolytic copper; gastight crimped; acc. to DIN 46228, Part 4/09.90; gray

Item No.: 216-243
Ferrule; Sleeve for 1 mm² / AWG 18; insulated; electro-tin plated; electrolytic copper; gastight crimped; acc. to DIN 46228, Part 4/09.90; red

Item No.: 216-263
Ferrule; Sleeve for 1 mm² / AWG 18; insulated; electro-tin plated; electrolytic copper; gastight crimped; acc. to DIN 46228, Part 4/09.90; red

Item No.: 216-244
Ferrule; Sleeve for 1.5 mm² / AWG 16; insulated; electro-tin plated; electrolytic copper; gastight crimped; acc. to DIN 46228, Part 4/09.90; black

Item No.: 216-264
Ferrule; Sleeve for 1.5 mm² / AWG 16; insulated; electro-tin plated; electrolytic copper; gastight crimped; acc. to DIN 46228, Part 4/09.90; black

Item No.: 216-246
Ferrule; Sleeve for 2.5 mm² / AWG 14; insulated; electro-tin plated; electrolytic copper; gastight crimped; acc. to DIN 46228, Part 4/09.90; blue

Item No.: 216-266
Ferrule; Sleeve for 2.5 mm² / AWG 14; insulated; electro-tin plated; electrolytic copper; gastight crimped; acc. to DIN 46228, Part 4/09.90; blue

1.2.4 Installation

1.2.4.1 Cover

Item No.: 709-156
Cover; Type 3; suitable for cover carrier, type 3; 1 m long; transparent

1.2.4.2 Cover carrier

Item No.: 709-169
Cover carrier; Type 3; incl. fixing/retaining screws and knurled nut; suitable for 279 to 282 and 880 Series rail-mounted terminal blocks; suitable for 264 Series miniature rail-mounted terminal blocks; suitable for 270 Series sensor and actuator terminal blocks; gray

 Continued on next page

1.2.5 Insulation stop

1.2.5.1 Insulation stop

Item No.: 2002-171
Insulation stop; 0.25 - 0.5 mm²; 5 pieces/ strip; light gray

Item No.: 2002-172
Insulation stop; 0.75 - 1 mm²; 5 pieces/ strip; dark gray

1.2.6 Jumper

1.2.6.1 Jumper

Item No.: 2002-400
Continuous jumper; 2-way; insulated; light gray

Item No.: 2002-413
Continuous jumper; 3-way; insulated; light gray

Item No.: 2002-415
Continuous jumper; 5-way; insulated; light gray

Item No.: 2002-423/000-006
Continuous jumper; from 1 to 3; insulated; blue

Item No.: 2002-423
Continuous jumper; from 1 to 3; insulated; light gray

Item No.: 2002-423/000-005
Continuous jumper; from 1 to 3; insulated; red

Item No.: 2002-424/000-006
Continuous jumper; from 1 to 4; insulated; blue

Item No.: 2002-424
Continuous jumper; from 1 to 4; insulated; light gray

Item No.: 2002-424/000-005
Continuous jumper; from 1 to 4; insulated; red

Item No.: 2002-406/020-000
Delta jumper; insulated; light gray

Item No.: 2002-410/000-006
Jumper; 10-way; insulated; blue

Item No.: 2002-410
Jumper; 10-way; insulated; light gray

Item No.: 2002-410/000-005
Jumper; 10-way; insulated; red

Item No.: 2002-402/000-006
Jumper; 2-way; insulated; blue

Item No.: 2002-402
Jumper; 2-way; insulated; light gray

Item No.: 2002-402/000-005
Jumper; 2-way; insulated; red

Item No.: 2002-403/000-006
Jumper; 3-way; insulated; blue

Item No.: 2002-403
Jumper; 3-way; insulated; light gray

Item No.: 2002-403/000-005
Jumper; 3-way; insulated; red

Item No.: 2002-404/000-006
Jumper; 4-way; insulated; blue

Item No.: 2002-404
Jumper; 4-way; insulated; light gray

Item No.: 2002-404/000-005
Jumper; 4-way; insulated; red

Item No.: 2002-405/000-006
Jumper; 5-way; insulated; blue

Item No.: 2002-405
Jumper; 5-way; insulated; light gray

Item No.: 2002-405/000-005
Jumper; 5-way; insulated; red

Item No.: 2002-406/000-006
Jumper; 6-way; insulated; blue

Item No.: 2002-406
Jumper; 6-way; insulated; light gray

Item No.: 2002-406/000-005
Jumper; 6-way; insulated; red

Item No.: 2002-407/000-006
Jumper; 7-way; insulated; blue

Item No.: 2002-407
Jumper; 7-way; insulated; light gray

Item No.: 2002-407/000-005
Jumper; 7-way; insulated; red

Item No.: 2002-408/000-006
Jumper; 8-way; insulated; blue

Item No.: 2002-408
Jumper; 8-way; insulated; light gray

Item No.: 2002-408/000-005
Jumper; 8-way; insulated; red

Item No.: 2002-409/000-006
Jumper; 9-way; insulated; blue

Item No.: 2002-409
Jumper; 9-way; insulated; light gray

Item No.: 2002-409/000-005
Jumper; 9-way; insulated; red

Item No.: 2002-440
Jumper; from 1 to 10; insulated; light gray

Item No.: 2002-433
Jumper; from 1 to 3; insulated; light gray

Item No.: 2002-434
Jumper; from 1 to 4; insulated; light gray

Item No.: 2002-435
Jumper; from 1 to 5; insulated; light gray

Item No.: 2002-436
Jumper; from 1 to 6; insulated; light gray

Item No.: 2002-437
Jumper; from 1 to 7; insulated; light gray

Item No.: 2002-438
Jumper; from 1 to 8; insulated; light gray

 Continued on next page

1.2.6.1 Jumper

Item No.: 2002-439
Jumper; from 1 to 9; insulated; light gray

Item No.: 2002-480
Staggered jumper; 10-way; insulated; light gray

Item No.: 2002-481
Staggered jumper; 11-way; insulated; light gray

Item No.: 2002-482
Staggered jumper; 12-way; insulated; light gray

Item No.: 2002-473/011-000
Staggered jumper; 2-way; from 1 to 3; insulated; light gray

Item No.: 2002-472
Staggered jumper; 2-way; insulated; light gray

Item No.: 2002-473
Staggered jumper; 3-way; insulated; light gray

Item No.: 2002-475/011-000
Staggered jumper; 3-way; insulated; light gray

Item No.: 2002-474
Staggered jumper; 4-way; insulated; light gray

Item No.: 2002-475
Staggered jumper; 5-way; insulated; light gray

Item No.: 2002-476
Staggered jumper; 6-way; insulated; light gray

Item No.: 2002-477
Staggered jumper; 7-way; insulated; light gray

Item No.: 2002-478
Staggered jumper; 8-way; insulated; light gray

Item No.: 2002-479
Staggered jumper; 9-way; insulated; light gray

Item No.: 2002-477/011-000
Staggered jumper; insulated; light gray

Item No.: 2002-479/011-000
Staggered jumper; insulated; light gray

Item No.: 2002-481/011-000
Staggered jumper; insulated; light gray

Item No.: 2002-405/011-000
Star point jumper; 3-way; insulated; light gray

Item No.: 2006-499
Step-down jumper; from 2006/2004 to 2004/2002/2001 series; from 2206/2204 to 2204/2202/2201 series; insulated; light gray

Item No.: 2016-499
Step-down jumper; from 2016/2010 to 2010/2006/2004/2002 series; from 2216/2210 to 2210/2206/2204/2202 series; insulated; light gray

Item No.: 210-103
Wire commoning chain; insulated; black

Item No.: 210-123
Wire commoning chain; insulated; blue

1.2.7 Marking

1.2.7.1 Group marker carrier

Item No.: 2009-191
Group marker carrier; gray

Item No.: 2009-192
Group marker carrier; gray

Item No.: 2009-193
Group marker carrier; gray

1.2.7.2 Marker

Item No.: 2009-145/000-006
Mini-WSB Inline; for Smart Printer; 1700 pieces on roll; stretchable 5 - 5.2 mm; plain; snap-on type; blue

Item No.: 2009-145/000-007
Mini-WSB Inline; for Smart Printer; 1700 pieces on roll; stretchable 5 - 5.2 mm; plain; snap-on type; gray

Item No.: 2009-145/000-023
Mini-WSB Inline; for Smart Printer; 1700 pieces on roll; stretchable 5 - 5.2 mm; plain; snap-on type; green

Item No.: 2009-145/000-012
Mini-WSB Inline; for Smart Printer; 1700 pieces on roll; stretchable 5 - 5.2 mm; plain; snap-on type; orange

Item No.: 2009-145/000-005
Mini-WSB Inline; for Smart Printer; 1700 pieces on roll; stretchable 5 - 5.2 mm; plain; snap-on type; red

Item No.: 2009-145/000-024
Mini-WSB Inline; for Smart Printer; 1700 pieces on roll; stretchable 5 - 5.2 mm; plain; snap-on type; violet

Item No.: 2009-145
Mini-WSB Inline; for Smart Printer; 1700 pieces on roll; stretchable 5 - 5.2 mm; plain; snap-on type; white

Item No.: 2009-145/000-002
Mini-WSB Inline; for Smart Printer; 1700 pieces on roll; stretchable 5 - 5.2 mm; plain; snap-on type; yellow

Item No.: 248-501/000-006
Mini-WSB marking card; as card; not stretchable; plain; snap-on type; blue

Item No.: 248-501/000-007
Mini-WSB marking card; as card; not stretchable; plain; snap-on type; gray

Item No.: 248-501/000-023
Mini-WSB marking card; as card; not stretchable; plain; snap-on type; green

Item No.: 248-501/000-017
Mini-WSB marking card; as card; not stretchable; plain; snap-on type; light green

Item No.: 248-501/000-012
Mini-WSB marking card; as card; not stretchable; plain; snap-on type; orange

Item No.: 248-501/000-005
Mini-WSB marking card; as card; not stretchable; plain; snap-on type; red

Item No.: 248-501/000-024
Mini-WSB marking card; as card; not stretchable; plain; snap-on type; violet

Item No.: 248-501
Mini-WSB marking card; as card; not stretchable; plain; snap-on type; white

 Continued on next page

1.2.7.2 Marker

Item No.: 248-501/000-002
Mini-WSB marking card; as card; not stretchable; plain; snap-on type; yellow

Item No.: 793-5501/000-006
WMB marking card; as card; for terminal block width 5 - 17.5 mm; stretchable 5 - 5.2 mm; plain; snap-on type; blue

Item No.: 793-5501/000-014
WMB marking card; as card; for terminal block width 5 - 17.5 mm; stretchable 5 - 5.2 mm; plain; snap-on type; brown

Item No.: 793-5501/000-007
WMB marking card; as card; for terminal block width 5 - 17.5 mm; stretchable 5 - 5.2 mm; plain; snap-on type; gray

Item No.: 793-5501/000-023
WMB marking card; as card; for terminal block width 5 - 17.5 mm; stretchable 5 - 5.2 mm; plain; snap-on type; green

Item No.: 793-5501/000-017
WMB marking card; as card; for terminal block width 5 - 17.5 mm; stretchable 5 - 5.2 mm; plain; snap-on type; light green

Item No.: 793-5501/000-012
WMB marking card; as card; for terminal block width 5 - 17.5 mm; stretchable 5 - 5.2 mm; plain; snap-on type; orange

Item No.: 793-5501/000-005
WMB marking card; as card; for terminal block width 5 - 17.5 mm; stretchable 5 - 5.2 mm; plain; snap-on type; red

Item No.: 793-5501/000-024
WMB marking card; as card; for terminal block width 5 - 17.5 mm; stretchable 5 - 5.2 mm; plain; snap-on type; violet

Item No.: 793-5501
WMB marking card; as card; for terminal block width 5 - 17.5 mm; stretchable 5 - 5.2 mm; plain; snap-on type; white

Item No.: 793-5501/000-002
WMB marking card; as card; for terminal block width 5 - 17.5 mm; stretchable 5 - 5.2 mm; plain; snap-on type; yellow

Item No.: 2009-115/000-006
WMB-Inline; for Smart Printer; 1500 pieces on roll; stretchable 5 - 5.2 mm; plain; snap-on type; blue

Item No.: 2009-115/000-007
WMB-Inline; for Smart Printer; 1500 pieces on roll; stretchable 5 - 5.2 mm; plain; snap-on type; gray

Item No.: 2009-115/000-023
WMB-Inline; for Smart Printer; 1500 pieces on roll; stretchable 5 - 5.2 mm; plain; snap-on type; green

Item No.: 2009-115/000-017
WMB-Inline; for Smart Printer; 1500 pieces on roll; stretchable 5 - 5.2 mm; plain; snap-on type; light green

Item No.: 2009-115/000-012
WMB-Inline; for Smart Printer; 1500 pieces on roll; stretchable 5 - 5.2 mm; plain; snap-on type; orange

Item No.: 2009-115/000-005
WMB-Inline; for Smart Printer; 1500 pieces on roll; stretchable 5 - 5.2 mm; plain; snap-on type; red

Item No.: 2009-115/000-024
WMB-Inline; for Smart Printer; 1500 pieces on roll; stretchable 5 - 5.2 mm; plain; snap-on type; violet

Item No.: 2009-115
WMB-Inline; for Smart Printer; 1500 pieces on roll; stretchable 5 - 5.2 mm; plain; snap-on type; white

Item No.: 2009-115/000-002
WMB-Inline; for Smart Printer; 1500 pieces on roll; stretchable 5 - 5.2 mm; plain; snap-on type; yellow

1.2.7.3 Marker carrier

Item No.: 2002-161
Adaptor; gray

Item No.: 2009-198
Adaptor; gray

1.2.7.4 Marking strip

Item No.: 2009-110
Marking strips; for Smart Printer; on reel; not stretchable; plain; snap-on type; white

1.2.8 Plug

1.2.8.1 Component module with diode

Item No.: 2002-880/1000-411
Component plug; 2-pole; with diode 1N4007; 10.4 mm wide; Operating temperature 85°C max.; gray

 Continued on next page

1.2.8.2 Component module with LED

Item No.: 2002-880/1000-541
Component plug; 2-pole; LED (red); 10.4 mm wide; Operating temperature 85°C max.; gray

Item No.: 2002-880/1000-836
Component plug; 2-pole; LED (red); 10.4 mm wide; Operating temperature 85°C max.; gray

Item No.: 2002-880/1000-542
Component plug; 2-pole; LED (red); 10.4 mm wide; Operating temperature 85°C max.; multicoloured

1.2.8.3 Empty component plug housing

Item No.: 2002-880
Empty component plug housing; 10.4 mm wide; 2-pole; Type 4; gray

1.2.9 Push-in type wire jumper

1.2.9.1 Jumper

Item No.: 2009-414
Push-in type wire jumper; 1.5 mm²; insulated; 110 mm long; black

Item No.: 2009-414/000-005
Push-in type wire jumper; 1.5 mm²; insulated; 110 mm long; black

Item No.: 2009-416
Push-in type wire jumper; 1.5 mm²; insulated; 250 mm long; black

Item No.: 2009-414/000-006
Push-in type wire jumper; insulated; 110 mm long; black

Item No.: 2009-412
Push-in type wire jumper; insulated; 60 mm long; black

1.2.10 Screwless end stop

1.2.10.1 Mounting accessories

Item No.: 249-117
Screwless end stop; 10 mm wide; for DIN-rail 35 x 15 and 35 x 7.5; gray

Item No.: 249-116
Screwless end stop; 6 mm wide; for DIN-rail 35 x 15 and 35 x 7.5; gray

1.2.11 Test and measurement

1.2.11.1 Testing accessories

Item No.: 2002-560
Modular TOPJOB®S connector; modular; for jumper contact slot; 10-pole; 2,50 mm²; gray

Item No.: 2002-511
Modular TOPJOB®S connector; modular; for jumper contact slot; 1-pole; 2,50 mm²; gray

Item No.: 2002-552
Modular TOPJOB®S connector; modular; for jumper contact slot; 2-pole; 2,50 mm²; gray

Item No.: 2002-553
Modular TOPJOB®S connector; modular; for jumper contact slot; 3-pole; 2,50 mm²; gray

Item No.: 2002-554
Modular TOPJOB®S connector; modular; for jumper contact slot; 4-pole; 2,50 mm²; gray

Item No.: 2002-555
Modular TOPJOB®S connector; modular; for jumper contact slot; 5-pole; 2,50 mm²; gray

Item No.: 2002-556
Modular TOPJOB®S connector; modular; for jumper contact slot; 6-pole; 2,50 mm²; gray

Item No.: 2002-557
Modular TOPJOB®S connector; modular; for jumper contact slot; 7-pole; 2,50 mm²; gray

Item No.: 2002-558
Modular TOPJOB®S connector; modular; for jumper contact slot; 8-pole; 2,50 mm²; gray

Item No.: 2002-559
Modular TOPJOB®S connector; modular; for jumper contact slot; 9-pole; 2,50 mm²; gray

Item No.: 2002-549
Spacer module; modular; e.g., for bridging commoned terminal blocks; gray

Item No.: 2009-174
Test plug adapter; for 4 mm Ø test plugs; for testing TOPJOB®S rail-mounted terminal blocks; gray

 Continued on next page

1.2.11.1 Testing accessories

Item No.: 2009-182
Testing tap; for max. 2.5 mm²; tool-free connection for individual test wires 0.08 - 2.5 mm; gray

Item No.: 2002-649
TOPJOB®S L-type spacer module; modular; e.g., for bridging commoned terminal blocks; gray

1.2.12 Tool

1.2.12.1 Operating tool

Item No.: 210-658
Operating tool; Blade: 3.5 x 0.5 mm; with a partially insulated shaft; angled; short; multicoloured

Item No.: 210-720
Operating tool; Blade: 3.5 x 0.5 mm; with a partially insulated shaft; multicoloured

Installation Notes

Conductor termination

All conductor types at a glance

Push-in termination of solid and ferruled conductors

Insert fine-stranded conductors via operating tool.

Removing all conductors via operating tool.

Commoning

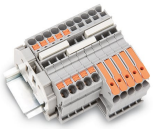

Insert a push-in type jumper bar and push down until it hits the backstop.

Commoning with step-down jumpers.

Step-down jumper (2006-499) commons 6/4 mm² (10/12 AWG) terminal blocks (2206/2204 Series) with 4/2.5/1.5 mm² (AWG 12/14/16) terminal blocks (2204/2202/2201 Series).

Testing

Testing with a 2 mm Ø test plug (max. 42 V).

 Continued on next page

Marking

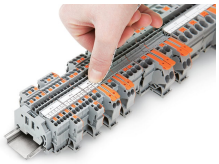

Snapping a marking strip into a marker slot.

Snapping a marking strip into the marker slot.