OPPLE LIGHTING.

Downlight Performer G2 HG

- High quality LED Downlight with upgraded efficacy up to 130 lm/W with CRI90 for all versions
- Integrated CCT switch for color selection (3000K-4000K)
- Unique optical lens concept with high gloss (HG) reflector and low glare
- Direct replacement for compact fluorescent downlights
- IP44 on light emitting side
- Provided with protective foil in order to protect the optics against dust and dirt during the installation

IP44 | CRI90 | UGR≤19 | IP20 / IP44

Specifications

Item Code	Item Description	Equivalent to (W)	Power (W)	Lumen	Efficacy (lm/W)	UGR	CCT (K)	Weight (pc/kg)
Smart								
540001389200	LEDDownlightHG-P2 Rd200-15W-BLE2-930/940	CFL 1x26W	15	1950	130	19	3K/4K	0.83

Available on request with Wieland GST18 or WAGO WINSTA connector, or Euro/Schuko plug. DALI2 versions are compatible with central emergency lighting according to EN 50172.

Accessories

140060647
LEDDownlightRc-P-SI-E-Adapter-200-225

140060648
LEDDownlightRc-P-SI-E-Adapter-200-250

542098000800
LEDPanelRC-SI U19 EM-kit 1h

542098000900
LEDPanelRC-SI U19 EM-kit 3h

542098030700
Junction-Box-WH

Packaging information

Item			Box			
Item Code	Item Description	EU HS Code	Dimensions (mm) (LxWxH)	Gross Weight (kg)	EAN	pc/box
540001389200	LEDDownlightHG-P2 Rd200-15W-BLE2-930/940	94051190	229x75x246	1.62	6941491747903	1
140060647	LEDDownlightRc-P-SI-E-Adapter-200-225	94059900	250x250x20	0.23	6956321894139	1
140060648	LEDDownlightRc-P-SI-E-Adapter-200-250	94059900	275x275x20	0.20	6956321894146	1
542098000800	LEDPanelRC-SI U19 EM-kit 1h	85044083	490x390x150	0.98	6941497702340	1
542098000900	LEDPanelRC-SI U19 EM-kit 3h	85044083	490x390x150	1.08	6941497702333	1
542098030700	Junction-Box-WH	85369010	43x103x36	0.06	6941408868684	1
540098018400	LEDDownlight-P-Surface-Module-Rd200	94051190	280x280x200	2.00	6941491749556	1

Technical Specifications	
Lifetime (L70)	100,000 h
Lifetime (L80)	70,000 h
On-/Off-cycles	100,000
Colour consistency (SDCM)	4
Dimmability	BLE2
Beam angle	70 °
Finishing	White RAL9003
RAL-Number	9003
Colour rendering index (CRI)	> 90
Ingress protection front side (IP)	IP44
Ingress protection recessed part (IP)	IP20
Impact strength (IK)	IK02
Protection class	II
Risk group (EN 62471)	RG0 / RG1 (22W &30W &40W)
With control gear	True
Glow wire test	650 °C
Driver failure rate (at 5,000 hrs)	≤ 1 %
Power factor	≥ 0.9

Electrical Supply	
Frequency	50 - 60 Hz
Nominal voltage	220 - 240 V
DC input voltage	See catalogue appendix Connection Specifications

Mechanical Properties	
Housing material	Aluminium
Optical material	Polycarbonate

Ambient Conditions	
Operating temperature	-10 ~ 45 °C
Application temperature	25 °C
Storage environment	-25 ~ 50 °C

Dimensional Drawing (mm)

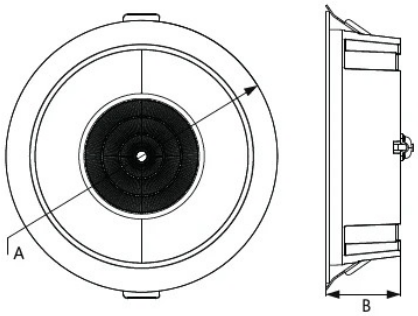

	A	B
Rd125	138	44
Rd150	173	51
Rd200	226	62

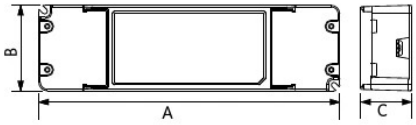

	A	B	C
On/Off	160	56	24
Dim	180	51	31

Installation Opening Drawing (mm)

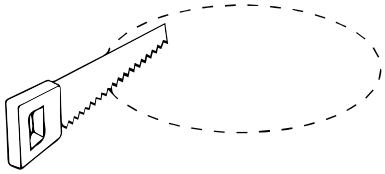

Ø125

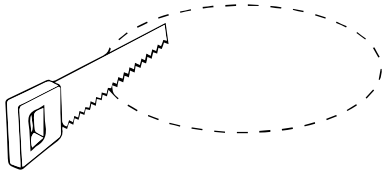

Ø150

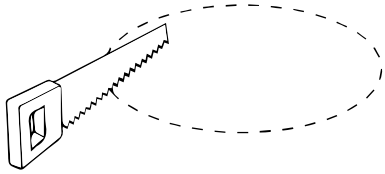

Ø200

Motion Sensors
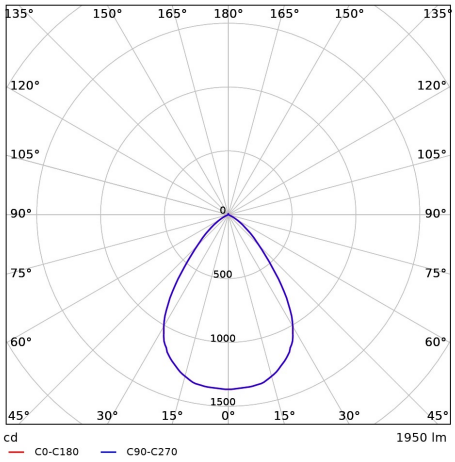
Photometric Data