Product datasheet

Specifications

84mm Rotating Mirror Blue 24VAC-DC

Local distributor code:

398334307 XVR08B06

EAN Code: 3606480033025

Main

Range of product	Harmony XVR
Product or component type	Prewired rotating mirror beacon
Sound signalling	Without
Device short name	XVR
Mounting diameter	84 mm
IP degree of protection	IP65 (with accessory) conforming to IEC 60529 IP23 conforming to IEC 60529
[Us] rated supply voltage	24 V AC/DC
Light source	High luminosity LED, blue

Complementary

Material	ABS (acrylonitrile butadiene-styrene): body part PC: globe
CAD overall width	84 mm
CAD overall depth	84 mm
Net weight	0.3 kg
Marking	CE
Product mounting	By 3 M4 screws
Supply voltage limits	19…30 V DC 21.6…26.4 V AC
[Uimp] rated impulse withstand voltage	0.8 kV
Current consumption	125 mA
Flashing frequency	2.3 Hz
Clamping connection capacity	0.83 mm²
AWG gauge	AWG 18
Cable length	500 mm

Environment

Standards	IEC 61000-6-2 IEC 61000-6-4
Product certifications	UL
Protective treatment	TC
Ambient air temperature for storage	-35…70 °C

Disclaimer: This documentation is not intended as a substitute for and is not to be used for determining suitability or reliability of these products for specific user applications

Ambient air temperature for operation	-10…50 °C
Electrical shock protection class	Class II conforming to IEC 61140

Packing Units

Unit Type of Package 1	PCE
Number of Units in Package 1	1
Package 1 Height	18.500 cm
Package 1 Width	9.500 cm
Package 1 Length	9.500 cm
Package 1 Weight	390.000 g
Unit Type of Package 2	S03
Number of Units in Package 2	6
Package 2 Height	30.000 cm
Package 2 Width	30.000 cm
Package 2 Length	40.000 cm
Package 2 Weight	3.193 kg

Logistical informations

Country of origin	ID

Contractual warranty

Warranty	18 months

Environmental Data

Schneider Electric aims to achieve Net Zero status by 2050 through supply chain partnerships, lower impact materials, and circularity via our ongoing “Use Better, Use Longer, Use Again” campaign to extend product lifetimes and recyclability.

Environmental Data explained >

How we assess product sustainability >

Environmental footprint

Total lifecycle Carbon footprint	**11**
Environmental Disclosure	**Product Environmental Profile**

Use Better

Materials and Substances

Packaging made with recycled cardboard	**Yes**
Packaging without single use plastic	**No**
EU RoHS Directive	**Pro-active compliance (Product out of EU RoHS legal scope)**
REACh Regulation	**REACh Declaration**

Use Again

Repack and remanufacture

End of life manual availability	**End of Life Information**
Take-back	**No**

Dimensions Drawings

Rotating Mirror Beacon

Dimensions

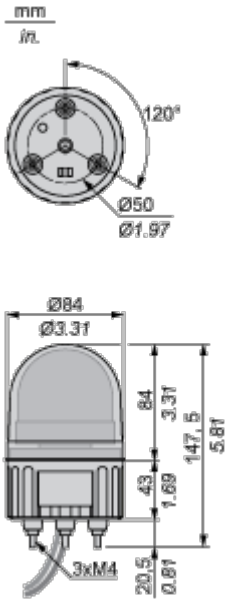

Mounting and Clearance

Rotating Mirror Beacon

Panel Cut-out

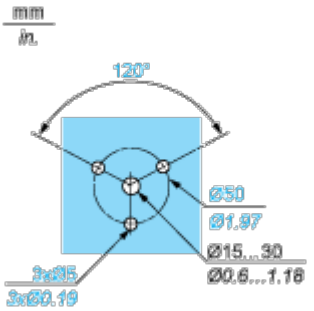

Technical Illustration
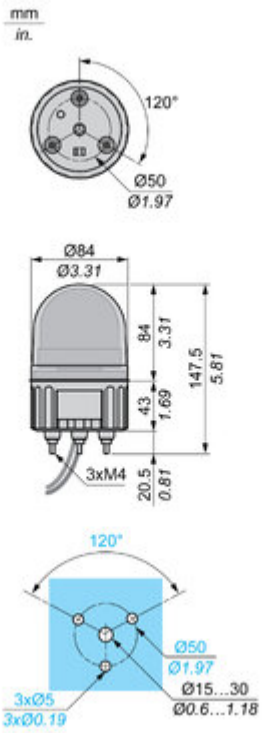
Dimensions