Armorduct	TOLERANCES GENERAL: ±0.5 ANGULAR: ±1.0° TWIST: 1:600 STRAIGHT: 1:600	Product Code: **AD-HD18/PG**	Customer:	DWN By: **GW**	CKD By: **DT**	DWG No: AD-CT-10010 SHEET 1 OF 1
PROJ'N: 3rd SCALE: 2:7 @ A3		Description: HEAVY DUTY TRAY - 3000mm LENGTH	Customer Ref:	ISSUE	DATE	MODIFICATION
ALL DIMENSIONS IN MILLIMETRES UNLESS OTHERWISE STATED				A	29/07/2020	ORIGINAL
© THIS DRAWING IS THE PROPERTY OF ARMORDUCT SYSTEMS Ltd AND IS ONLY ISSUED ON CONDITION THAT NO COPY IS TAKEN OR REPRODUCTION DISCLOSED TO A THIRD PARTY, EITHER WHOLLY, OR IN PART.		Mat'l Spec: GALVANISED (PRE) / Thickness: 1.100mm	Project Ref: Standard Cable Tray			
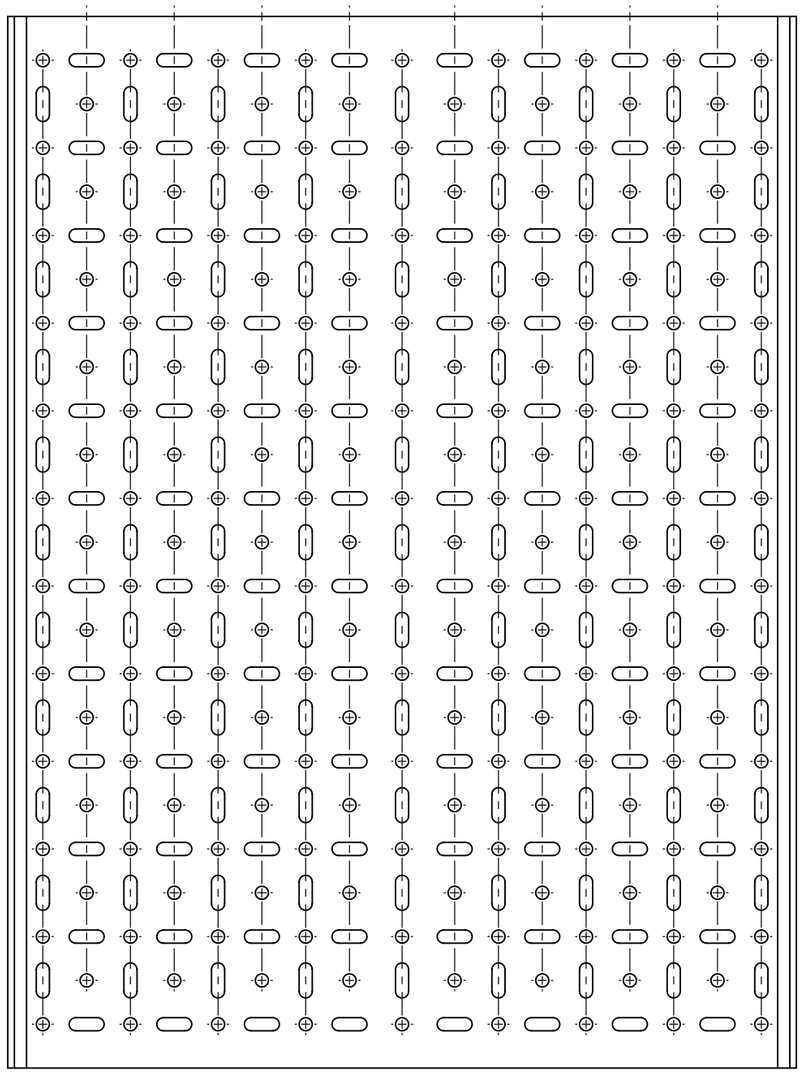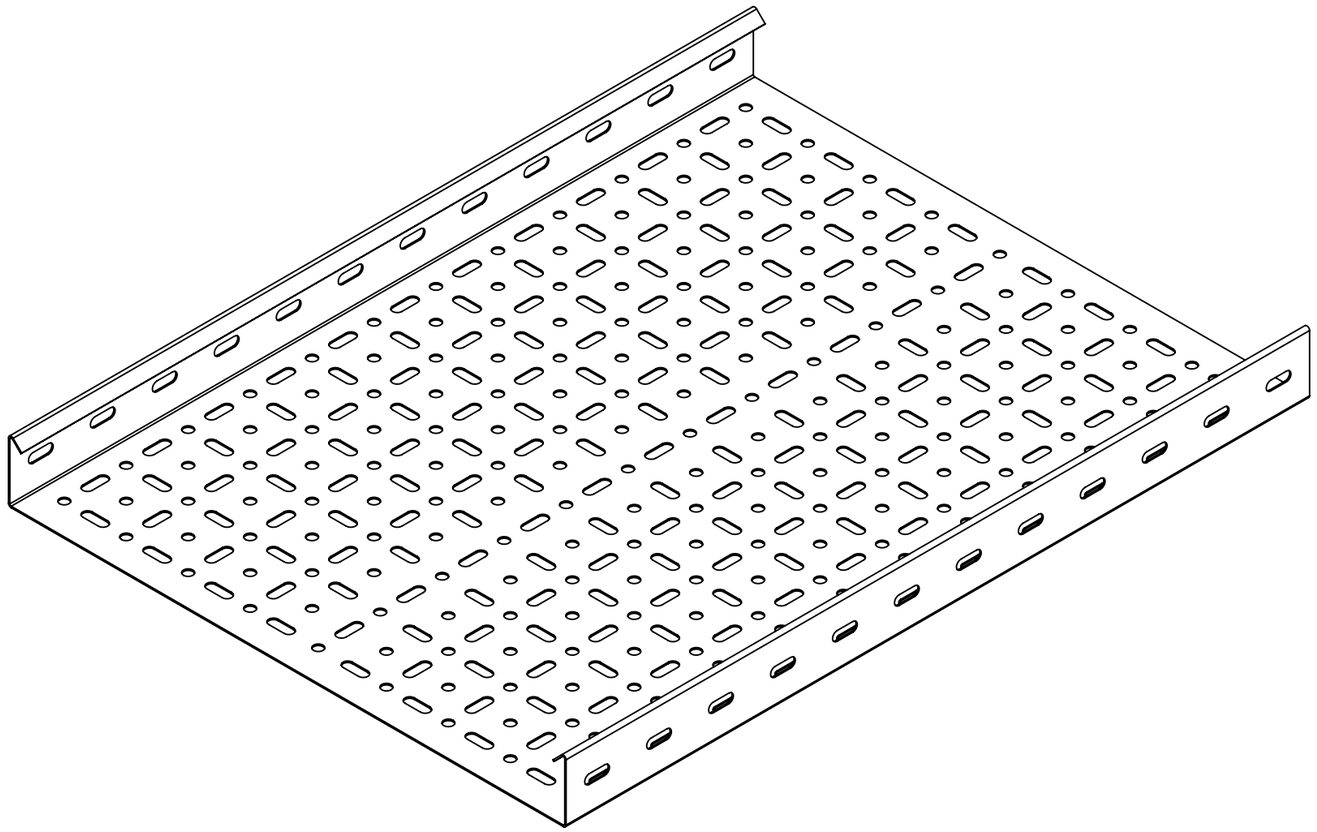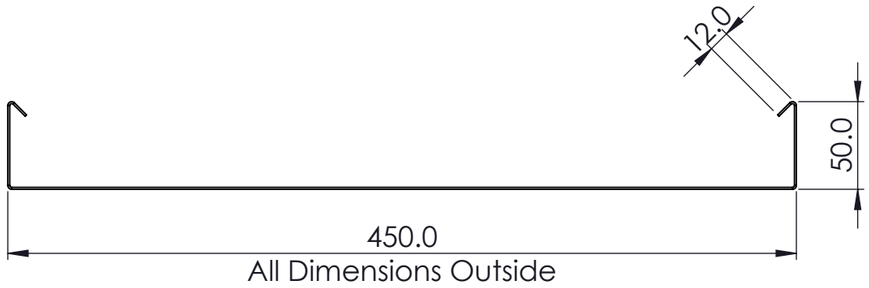
IF IN DOUBT ASK