II502A

Inductive full-metal sensor

IIK3010-BPKG/AM/US104DPS/3G/3D

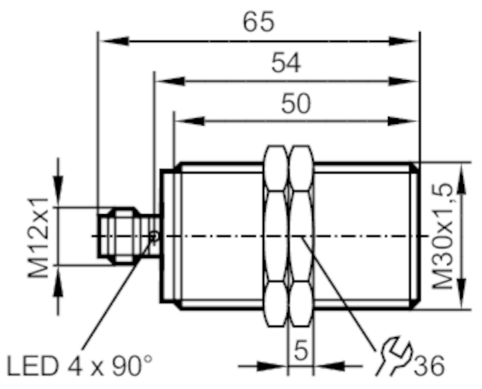

Product characteristics		
Electrical design		PNP
Output function		normally open
Sensing range	[mm]	10
Housing		threaded type
Dimensions	[mm]	M30 x 1.5 / L = 65
Application		
Special feature		Gold-plated contacts; Increased sensing range; Full-metal housing
Pressure rating	[bar]	100
Note on pressure rating		sensing face
Electrical data		
Operating voltage	[V]	10...30 DC
Current consumption	[mA]	< 20
Protection class		III
Reverse polarity protection		yes
Outputs		
Electrical design		PNP
Output function		normally open
Max. voltage drop switching output DC	[V]	2.5
Permanent current rating of switching output DC	[mA]	100
Switching frequency DC	[Hz]	50
Short-circuit protection		yes
Overload protection		yes
Detection zone		
Sensing range	[mm]	10
Real sensing range Sr	[mm]	10 ± 10 %
Operating distance	[mm]	0...8.1
Increased sensing range		yes

II502A

Inductive full-metal sensor

IIK3010-BPKG/AM/US104DPS/3G/3D

Accuracy / deviations			
Correction factor		steel: 1 / stainless steel: 0.6 / brass: 0.8 / aluminium: 0.6 / copper: 0.2	
Hysteresis	[% of Sr]	1...20	
Switch point drift	[% of Sr]	-10...10	
Operating conditions			
Ambient temperature	[°C]	-40...60	
Protection		IP 67; (when used outside the hazardous area: IP 65, IP 67, IP 68, IP 69K)	
Tests / approvals			
ATEX marking		II 3G Ex nA IIC T6 Gc X	
		II 3D Ex tc IIIC T85°C Dc X	
EMC		EN 61000-4-2 ESD	4 kV CD / 8 kV AD
		EN 61000-4-3 HF radiated	10 V/m
		EN 61000-4-4 Burst	2 kV
		EN 61000-4-6 HF conducted	10 V
		EN 55011	class B
Impact resistance		EN 60068-2-75 Ehc	1 J
Vibration resistance		EN 60068-2-6 Fc	20 g (10...3000 Hz) / 50 sweep cycles, 1 octave per minute, in 3 axes
Shock resistance		EN 60068-2-27 Ea	100 g 11 ms half-sine; 3 shocks each in every direction of the 3 coordinate axes
Continuous shock resistance		EN 60068-2-27 Ea	40 g 6 ms; 4000 shocks each in every direction of the 3 coordinate axes
Fast temperature change		EN 60068-2-14 Na	TA = -40°C; TB = 85°C; t1 = 30 min; t2 = 10 s 50 cycles
Salt spray test		EN 60068-2-52 Kb	severity level 5 (4 test cycles)
MTTF	[years]	1258	
Mechanical data			
Weight	[g]	207	
Housing		threaded type	
Mounting		flush mountable	
Dimensions	[mm]	M30 x 1.5 / L = 65	
Thread designation		M30 x 1.5	
Materials		stainless steel (1.4404 / 316L); PEI; lock nuts: stainless steel	
Tightening torque	[Nm]	80	
Full-metal housing		yes	
Displays / operating elements			
Display		switching status	4 x 90° LED, yellow
Accessories			
Items supplied		lock nuts: 2	
Remarks			
Pack quantity		1 pcs.	
Electrical connection - plug			
Connector: 1 x M12; Contacts: gold-plated			

II502A

Inductive full-metal sensor

IIK3010-BPKG/AM/US104DPS/3G/3D

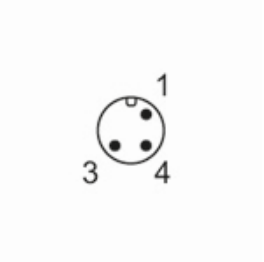
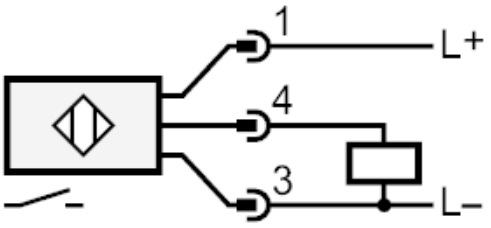
Connection