IN507A

Inductive dual sensor for valve actuators

IND3004DBPKG/US/3D/3G

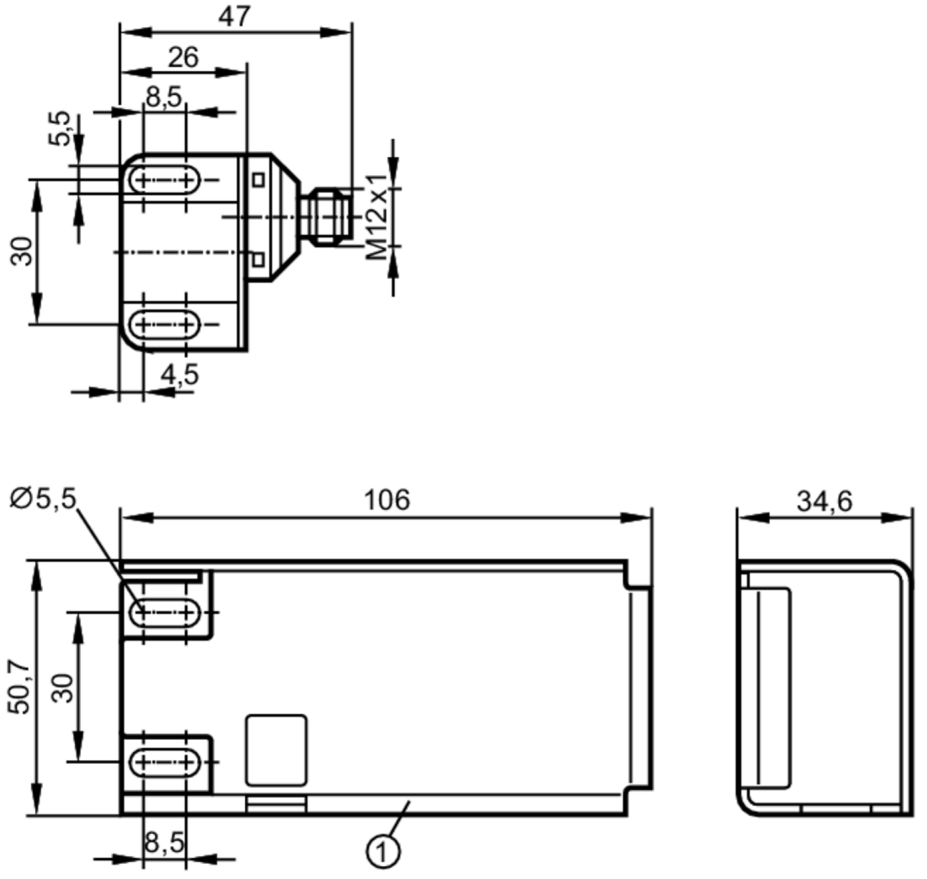

1 Impact protection housing

Product characteristics		
Electrical design		PNP
Output function		2 x normally open
Sensing range	[mm]	4
Housing		rectangular
Dimensions	[mm]	40 x 26 x 47
Electrical data		
Operating voltage	[V]	10...30 DC
Current consumption	[mA]	< 15
Protection class		III
Reverse polarity protection		yes

IN507A

Inductive dual sensor for valve actuators

IND3004DBPKG/US/3D/3G

Outputs		
Electrical design		PNP
Output function		2 x normally open
Max. voltage drop switching output DC	[V]	2.5
Permanent current rating of switching output DC	[mA]	100
Short-time current rating of switching output	[mA]	100
Switching frequency DC	[Hz]	1300
Short-circuit protection		yes
Type of short-circuit protection		pulsed
Overload protection		yes
Detection zone		
Sensing range	[mm]	4
Operating distance target puck	[mm]	1
Accuracy / deviations		
Correction factor		steel: 1 / stainless steel: 0.7 / brass: 0.5 / aluminium: 0.4 / copper: 0.3
Hysteresis	[% of Sr]	1...15
Switch point drift	[% of Sr]	-10...10
Operating conditions		
Ambient temperature	[°C]	-20...60
Protection		IP 67
Tests / approvals		
ATEX marking		II 3D Ex tc IIIC T80°C Dc IP67 X
		II 3G Ex nA IIC T6 Gc X
Note on ATEX marking		only in conjunction with the impact protection housing
EMC		EN 60947-5-2
MTTF	[years]	1064
Mechanical data		
Weight	[g]	341.5
Housing		rectangular
Dimensions	[mm]	40 x 26 x 47
Materials		housing: PBT; cover: PC; Impact protection housing: stainless steel
Displays / operating elements		
Display		switching status: 2 x LED, yellow
Accessories		
Items supplied		Impact protection housing socket head screws: 2 x M5 x 35 Mounting plate: 1
Remarks		
Pack quantity		1 pcs.

IN507A

Inductive dual sensor for valve actuators

IND3004DBPKG/US/3D/3G

Electrical connection - plug

Connector: 1 x M12; Moulded body: stainless steel

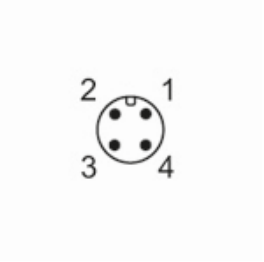
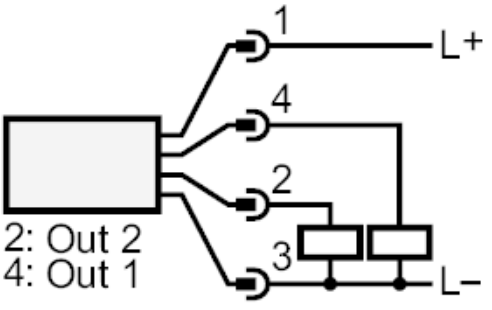
Connection