Data Sheet | Item Number: 2202-1204

2-conductor through terminal block; with push-button; 2.5 mm²; with test port; suitable for Ex i applications; side and center marking; for DIN-rail 35 x 15 and 35 x 7.5; Push-in CAGE CLAMP®; 2,50 mm²; blue

https://www.wago.com/2202-1204

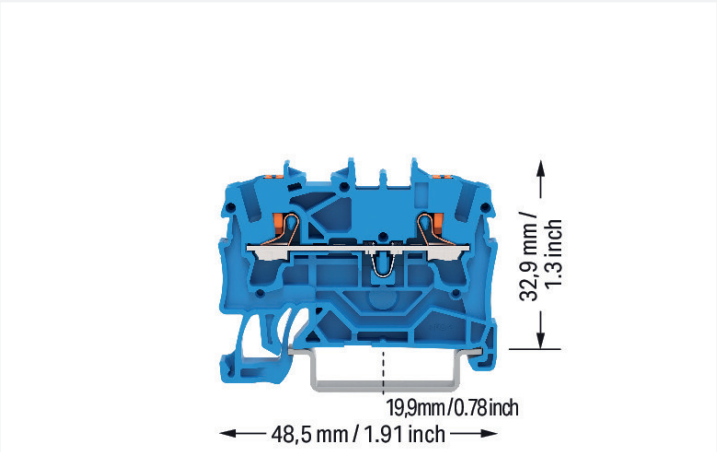

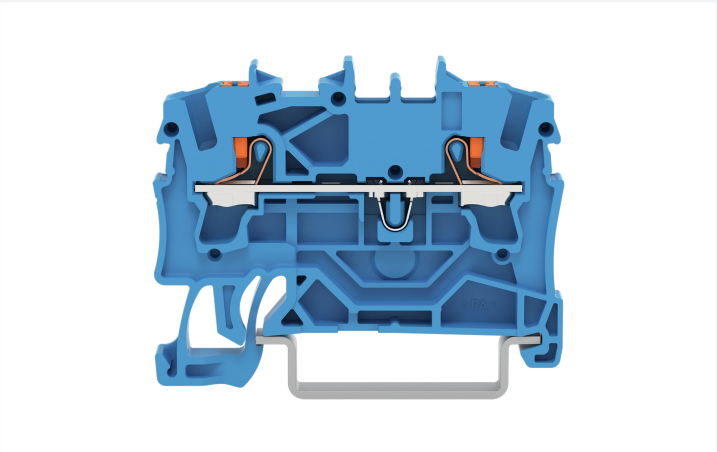

Color: blue

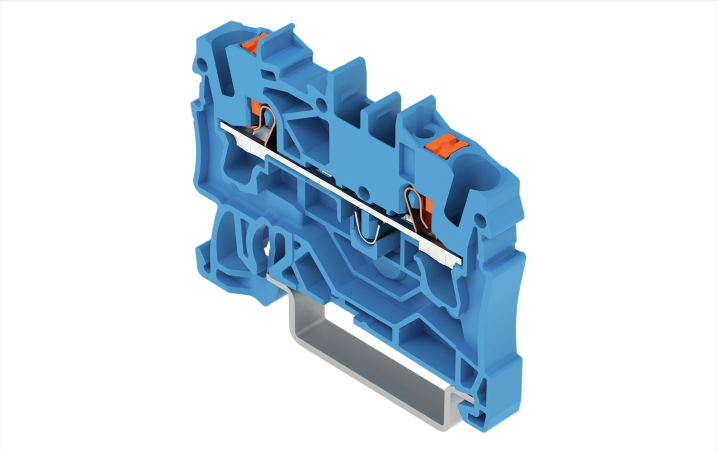

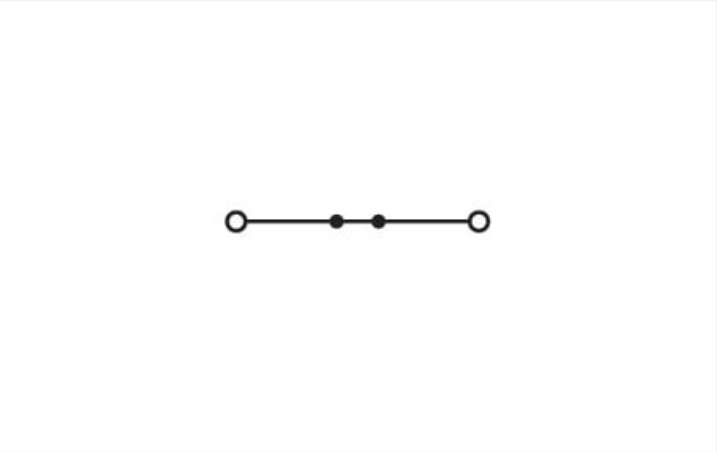

Similar to illustration

Electrical data

Ratings per IEC/EN

Ratings per	IEC/EN 60947-7-1
Nominal voltage (III/3)	800 V
Rated impulse voltage (III/3)	8 kV
Rated current	24 A
Current at conductor cross-section (max.) mm²	32 A
Legend (ratings)	(III / 3) ≙ Overvoltage category III / Pollution degree 3

Ratings per UL 1059

Approvals per	UL 1059
Rated voltage UL (Use Group B)	600 V
Rated current UL (Use Group B)	20 A
Rated voltage UL (Use Group C)	600 V
Rated current UL (Use Group C)	20 A

Ratings per CSA

Approvals per	CSA 22.2 No 158
Rated voltage CSA (Use Group B)	600 V
Rated current CSA (Use Group B)	20 A
Rated voltage CSA (Use Group C)	600 V
Rated current CSA (Use Group C)	20 A

Ex information

Reference hazardous areas	See “Downloads – Documentation – Additional Information: Technical Section; Technical Explications”
Ratings per	ATEX: PTB 18 ATEX 1005 U / IECEx: PTB 18.0012U (Ex eb IIC Gb)
Rated voltage EN (Ex e II)	550 V
Rated current (Ex e II)	22 A
Rated current (Ex e II) with jumper	20 A

Continued on next page

Power loss

Power loss, per pole (potential)	0.7661 W
Rated current I_N for specified power loss	24 A
Resistance value for specified, current-dependent power loss	0.00133 Ω

Connection data

Connection points	2
Total number of potentials	1
Number of levels	1
Number of jumper slots	2

Connection 1

Connection technology	Push-in CAGE CLAMP®
Actuation type	Push-button
Connectable conductor materials	Copper
Nominal cross-section	2.5 mm²
Solid conductor	0.25 … 4 mm² / 22 … 12 AWG
Solid conductor; push-in termination	0.75 … 4 mm² / 18 … 12 AWG
Fine-stranded conductor	0.25 … 4 mm² / 22 … 12 AWG
Fine-stranded conductor; with insulated ferrule	0.25 … 2.5 mm² / 22 … 14 AWG
Fine-stranded conductor; with ferrule; push-in termination	1 … 2.5 mm² / 18 … 14 AWG
Note (conductor cross-section)	Depending on the conductor characteristic, a conductor with a smaller cross-section can also be inserted via push-in termination.
Strip length	10 … 12 mm / 0.39 … 0.47 inches
Wiring direction	Front-entry wiring

Physical data

Width	5.2 mm / 0.205 inches
Height	48.5 mm / 1.909 inches
Depth from upper-edge of DIN-rail	32.9 mm / 1.295 inches

Mechanical data

Mounting type	DIN-35 rail
Marking level	Center/side marking

Material data

Note (material data)	Information on material specifications can be found here
Color	blue
Material group	I
Insulation material	Polyamide (PA66)
Flammability class per UL94	V0
Fire load	0.129 MJ
Weight	5.3 g

 Continued on next page

Environmental requirements

Processing temperature	-35 ... +85 °C
Continuous operating temperature	-60 ... +105 °C

Commercial data

eCl@ss 10.0	27-14-11-20
eCl@ss 9.0	27-14-11-20
ETIM 8.0	EC000897
ETIM 7.0	EC000897
PU (SPU)	100 pcs
Packaging type	Box
Country of origin	DE
GTIN	4055143713566
Customs tariff number	85369010000

Approvals / Certificates

General approvals

Approval	Standard	Certificate Name
CCA DEKRA Certification B.V.	EN 60947	NTR NL-7950
CSA DEKRA Certification B.V.	C22.2	70173745
cURus Underwriters Laboratories Inc.	UL 1059	E45172
KEMA/KEUR DEKRA Certification B.V.	EN 60947	71-124827

Declarations of conformity and manufacturer's declarations

Approval	Standard	Certificate Name
EU-Declaration of Conformity WAGO GmbH & Co. KG	-	-
UK-Declaration of Conformity WAGO GmbH & Co. KG	-	-

Approvals for marine applications

Approval	Standard	Certificate Name
ABS American Bureau of Shipping	-	19-HG1866350-PDA
BV Bureau Veritas S.A.	IEC 60947	58186/A0 BV
DNV GL Det Norske Veritas, Germanischer Lloyd	-	TAE00003JT
LR Lloyds Register	-	19/20050

Approvals for hazardous areas

Approval	Standard	Certificate Name
AEx Underwriters Laboratories Inc.	UL 60079	E185892 (AEx eb IIC resp. Ex eb IIC)
ATEX Physikalisch Technische Bundesanstalt	IEC 60079-0	PTB 18 ATEX 1005 U (II 2 G Ex eb IIC Gb bzw. I M 2 Ex eb I Mb)
CCC CNEX	GB/T 3836.3	2020312313000169 (Ex eb IIC Gb, Ex eb I Mb)
EAC Brjansker Zertifizierungsstelle	TP TC 012/2011	RU C-DE.AM02.B.00127/19 (Ex e IIC Gb U)
IECEx Physikalisch Technische Bundesanstalt	IEC 60079	IECEx PTB 18.0012U (Ex eb IIC Gb and Ex eb I Mb)

Downloads

Environmental Product Compliance

 Continued on next page

Compliance Search
Environmental Product Compliance 2202-1204

Documentation

Additional Information		
Technical Section	pdf 2142.18 KB	

Bid Text		
2202-1204	15.04.2019	xml 4.01 KB
2202-1204	15.04.2019	docx 14.87 KB

CAD/CAE-Data

CAD data
2D/3D Models 2202-1204

CAE data
EPLAN Data Portal 2202-1204
ZUKEN Portal 2202-1204

1 Compatible Products

1.1 Required Accessories

1.1.1 End plate

1.1.1.1 End plate

Item No.: 2002-1291
End and intermediate plate; 0.8 mm thick; gray

Item No.: 2002-1292
End and intermediate plate; 0.8 mm thick; orange

Item No.: 209-191
Separator for Ex e/Ex i applications; 3 mm thick; 120 mm wide; orange

Item No.: 209-190
Separator for Ex e/Ex i applications; 3 mm thick; 90 mm wide; orange

Item No.: 2002-1293
Seperator plate; 2 mm thick; oversized; gray

Item No.: 2002-1294
Seperator plate; 2 mm thick; oversized; orange

1.2 Optional Accessories

1.2.1 DIN-rail

 Continued on next page

1.2.1.1 Mounting accessories

Item No.: 210-196
Aluminum carrier rail; 35 x 8.2 mm; 1.6 mm thick; 2 m long; unslotted; similar to EN 60715; silver-colored

Item No.: 210-198
Copper carrier rail; 35 x 15 mm; 2.3 mm thick; 2 m long; unslotted; according to EN 60715; copper-colored

Item No.: 210-508
Steel carrier rail; 35 x 15 mm; 1.5 mm thick; 2 m long; slotted; galvanized; similar to EN 60715; silver-colored

Item No.: 210-197
Steel carrier rail; 35 x 15 mm; 1.5 mm thick; 2 m long; slotted; similar to EN 60715; silver-colored

Item No.: 210-506
Steel carrier rail; 35 x 15 mm; 1.5 mm thick; 2 m long; unslotted; galvanized; similar to EN 60715; silver-colored

Item No.: 210-114
Steel carrier rail; 35 x 15 mm; 1.5 mm thick; 2 m long; unslotted; similar to EN 60715; silver-colored

Item No.: 210-118
Steel carrier rail; 35 x 15 mm; 2.3 mm thick; 2 m long; unslotted; according to EN 60715; silver-colored

Item No.: 210-115
Steel carrier rail; 35 x 7.5 mm; 1 mm thick; 2 m long; slotted; according to EN 60715; "Hole width 18 mm; silver-colored

Item No.: 210-112
Steel carrier rail; 35 x 7.5 mm; 1 mm thick; 2 m long; slotted; according to EN 60715; "Hole width 25 mm; silver-colored

Item No.: 210-504
Steel carrier rail; 35 x 7.5 mm; 1 mm thick; 2 m long; slotted; galvanized; according to EN 60715; silver-colored

Item No.: 210-113
Steel carrier rail; 35 x 7.5 mm; 1 mm thick; 2 m long; unslotted; according to EN 60715; silver-colored

Item No.: 210-505
Steel carrier rail; 35 x 7.5 mm; 1 mm thick; 2 m long; unslotted; galvanized; according to EN 60715; silver-colored

1.2.2 Ferrule

1.2.2.1 Ferrule

Item No.: 216-241
Ferrule; Sleeve for 0.5 mm² / 20 AWG; insulated; electro-tin plated; electrolytic copper; gastight crimped; acc. to DIN 46228, Part 4/09.90; white

Item No.: 216-242
Ferrule; Sleeve for 0.75 mm² / 18 AWG; insulated; electro-tin plated; electrolytic copper; gastight crimped; acc. to DIN 46228, Part 4/09.90; gray

Item No.: 216-262
Ferrule; Sleeve for 0.75 mm² / 18 AWG; insulated; electro-tin plated; electrolytic copper; gastight crimped; acc. to DIN 46228, Part 4/09.90; gray

Item No.: 216-243
Ferrule; Sleeve for 1 mm² / AWG 18; insulated; electro-tin plated; electrolytic copper; gastight crimped; acc. to DIN 46228, Part 4/09.90; red

Item No.: 216-263
Ferrule; Sleeve for 1 mm² / AWG 18; insulated; electro-tin plated; electrolytic copper; gastight crimped; acc. to DIN 46228, Part 4/09.90; red

Item No.: 216-244
Ferrule; Sleeve for 1.5 mm² / AWG 16; insulated; electro-tin plated; electrolytic copper; gastight crimped; acc. to DIN 46228, Part 4/09.90; black

Item No.: 216-264
Ferrule; Sleeve for 1.5 mm² / AWG 16; insulated; electro-tin plated; electrolytic copper; gastight crimped; acc. to DIN 46228, Part 4/09.90; black

Item No.: 216-246
Ferrule; Sleeve for 2.5 mm² / AWG 14; insulated; electro-tin plated; electrolytic copper; gastight crimped; acc. to DIN 46228, Part 4/09.90; blue

Item No.: 216-266
Ferrule; Sleeve for 2.5 mm² / AWG 14; insulated; electro-tin plated; electrolytic copper; gastight crimped; acc. to DIN 46228, Part 4/09.90; blue

1.2.3 Installation

1.2.3.1 Cover

Item No.: 709-156
Cover; Type 3; suitable for cover carrier, type 3; 1 m long; transparent

 Continued on next page

1.2.3.2 Cover carrier

Item No.: 709-169
Cover carrier; Type 3; gray

1.2.4 Insulation stop

1.2.4.1 Insulation stop

Item No.: 2002-171
Insulation stop; 0.25 - 0.5 mm²; 5 pieces/ strip; light gray

Item No.: 2002-172
Insulation stop; 0.75 - 1 mm²; 5 pieces/ strip; dark gray

1.2.5 Jumper

1.2.5.1 Jumper

Item No.: 2002-400
Continuous jumper; 2-way; insulated; light gray

Item No.: 2002-423/000-006
Continuous jumper; from 1 to 3; insulated; blue

Item No.: 2002-423
Continuous jumper; from 1 to 3; insulated; light gray

Item No.: 2002-423/000-005
Continuous jumper; from 1 to 3; insulated; red

Item No.: 2002-424/000-006
Continuous jumper; from 1 to 4; insulated; blue

Item No.: 2002-424
Continuous jumper; from 1 to 4; insulated; light gray

Item No.: 2002-424/000-005
Continuous jumper; from 1 to 4; insulated; red

Item No.: 2002-406/020-000
Delta jumper; insulated; light gray

Item No.: 2002-410/000-006
Jumper; 10-way; insulated; blue

Item No.: 2002-410
Jumper; 10-way; insulated; light gray

Item No.: 2002-410/000-005
Jumper; 10-way; insulated; red

Item No.: 2002-402/000-006
Jumper; 2-way; insulated; blue

Item No.: 2002-402
Jumper; 2-way; insulated; light gray

Item No.: 2002-402/000-005
Jumper; 2-way; insulated; red

Item No.: 2002-403/000-006
Jumper; 3-way; insulated; blue

Item No.: 2002-403
Jumper; 3-way; insulated; light gray

Item No.: 2002-403/000-005
Jumper; 3-way; insulated; red

Item No.: 2002-404/000-006
Jumper; 4-way; insulated; blue

Item No.: 2002-404
Jumper; 4-way; insulated; light gray

Item No.: 2002-404/000-005
Jumper; 4-way; insulated; red

Item No.: 2002-405/000-006
Jumper; 5-way; insulated; blue

Item No.: 2002-405
Jumper; 5-way; insulated; light gray

Item No.: 2002-405/000-005
Jumper; 5-way; insulated; red

Item No.: 2002-406/000-006
Jumper; 6-way; insulated; blue

Item No.: 2002-406
Jumper; 6-way; insulated; light gray

Item No.: 2002-406/000-005
Jumper; 6-way; insulated; red

Item No.: 2002-407/000-006
Jumper; 7-way; insulated; blue

Item No.: 2002-407
Jumper; 7-way; insulated; light gray

Item No.: 2002-407/000-005
Jumper; 7-way; insulated; red

Item No.: 2002-408/000-006
Jumper; 8-way; insulated; blue

Item No.: 2002-408
Jumper; 8-way; insulated; light gray

Item No.: 2002-408/000-005
Jumper; 8-way; insulated; red

Item No.: 2002-409/000-006
Jumper; 9-way; insulated; blue

Item No.: 2002-409
Jumper; 9-way; insulated; light gray

Item No.: 2002-409/000-005
Jumper; 9-way; insulated; red

Item No.: 2002-440
Jumper; from 1 to 10; insulated; light gray

Item No.: 2002-433
Jumper; from 1 to 3; insulated; light gray

Item No.: 2002-434
Jumper; from 1 to 4; insulated; light gray

Item No.: 2002-435
Jumper; from 1 to 5; insulated; light gray

Item No.: 2002-436
Jumper; from 1 to 6; insulated; light gray

 Continued on next page

1.2.5.1 Jumper

Item No.: 2002-437
Jumper; from 1 to 7; insulated; light gray

Item No.: 2002-438
Jumper; from 1 to 8; insulated; light gray

Item No.: 2002-439
Jumper; from 1 to 9; insulated; light gray

Item No.: 2002-480
Staggered jumper; 10-way; insulated; light gray

Item No.: 2002-481
Staggered jumper; 11-way; insulated; light gray

Item No.: 2002-482
Staggered jumper; 12-way; insulated; light gray

Item No.: 2002-473/011-000
Staggered jumper; 2-way; from 1 to 3; insulated; light gray

Item No.: 2002-472
Staggered jumper; 2-way; insulated; light gray

Item No.: 2002-473
Staggered jumper; 3-way; insulated; light gray

Item No.: 2002-475/011-000
Staggered jumper; 3-way; insulated; light gray

Item No.: 2002-474
Staggered jumper; 4-way; insulated; light gray

Item No.: 2002-475
Staggered jumper; 5-way; insulated; light gray

Item No.: 2002-476
Staggered jumper; 6-way; insulated; light gray

Item No.: 2002-477
Staggered jumper; 7-way; insulated; light gray

Item No.: 2002-478
Staggered jumper; 8-way; insulated; light gray

Item No.: 2002-479
Staggered jumper; 9-way; insulated; light gray

Item No.: 2002-477/011-000
Staggered jumper; insulated; light gray

Item No.: 2002-479/011-000
Staggered jumper; insulated; light gray

Item No.: 2002-481/011-000
Staggered jumper; insulated; light gray

Item No.: 2002-405/011-000
Star point jumper; 3-way; insulated; light gray

Item No.: 2006-499
Step-down jumper; from 2006/2004 to 2004/2002/2001 series; from 2206/2204 to 2204/2202/2201 series; insulated; light gray

Item No.: 2016-499
Step-down jumper; from 2016/2010 to 2010/2006/2004/2002 series; from 2216/2210 to 2210/2206/2204/2202 series; insulated; light gray

Item No.: 210-103
Wire commoning chain; insulated; black

Item No.: 210-123
Wire commoning chain; insulated; blue

1.2.6 Marking

1.2.6.1 Group marker carrier

Item No.: 2009-191
Group marker carrier; gray

Item No.: 2009-192
Group marker carrier; gray

Item No.: 2009-193
Group marker carrier; gray

1.2.6.2 Marker

Item No.: 2009-145/000-006
Mini-WSB Inline; for Smart Printer; 1700 pieces on roll; stretchable 5 - 5.2 mm; plain; snap-on type; blue

Item No.: 2009-145/000-007
Mini-WSB Inline; for Smart Printer; 1700 pieces on roll; stretchable 5 - 5.2 mm; plain; snap-on type; gray

Item No.: 2009-145/000-023
Mini-WSB Inline; for Smart Printer; 1700 pieces on roll; stretchable 5 - 5.2 mm; plain; snap-on type; green

Item No.: 2009-145/000-012
Mini-WSB Inline; for Smart Printer; 1700 pieces on roll; stretchable 5 - 5.2 mm; plain; snap-on type; orange

Item No.: 2009-145/000-005
Mini-WSB Inline; for Smart Printer; 1700 pieces on roll; stretchable 5 - 5.2 mm; plain; snap-on type; red

Item No.: 2009-145/000-024
Mini-WSB Inline; for Smart Printer; 1700 pieces on roll; stretchable 5 - 5.2 mm; plain; snap-on type; violet

Item No.: 2009-145
Mini-WSB Inline; for Smart Printer; 1700 pieces on roll; stretchable 5 - 5.2 mm; plain; snap-on type; white

Item No.: 2009-145/000-002
Mini-WSB Inline; for Smart Printer; 1700 pieces on roll; stretchable 5 - 5.2 mm; plain; snap-on type; yellow

Item No.: 248-501/000-006
Mini-WSB marking card; as card; not stretchable; plain; snap-on type; blue

Item No.: 248-501/000-007
Mini-WSB marking card; as card; not stretchable; plain; snap-on type; gray

Item No.: 248-501/000-023
Mini-WSB marking card; as card; not stretchable; plain; snap-on type; green

Item No.: 248-501/000-017
Mini-WSB marking card; as card; not stretchable; plain; snap-on type; light green

Item No.: 248-501/000-012
Mini-WSB marking card; as card; not stretchable; plain; snap-on type; orange

Item No.: 248-501/000-005
Mini-WSB marking card; as card; not stretchable; plain; snap-on type; red

Item No.: 248-501/000-024
Mini-WSB marking card; as card; not stretchable; plain; snap-on type; violet

Item No.: 248-501
Mini-WSB marking card; as card; not stretchable; plain; snap-on type; white

Continued on next page

1.2.6.2 Marker

Item No.: 248-501/000-002
Mini-WSB marking card; as card; not stretchable; plain; snap-on type; yellow

Item No.: 793-5501/000-006
WMB marking card; as card; for terminal block width 5 - 17.5 mm; stretchable 5 - 5.2 mm; plain; snap-on type; blue

Item No.: 793-5501/000-014
WMB marking card; as card; for terminal block width 5 - 17.5 mm; stretchable 5 - 5.2 mm; plain; snap-on type; brown

Item No.: 793-5501/000-007
WMB marking card; as card; for terminal block width 5 - 17.5 mm; stretchable 5 - 5.2 mm; plain; snap-on type; gray

Item No.: 793-5501/000-023
WMB marking card; as card; for terminal block width 5 - 17.5 mm; stretchable 5 - 5.2 mm; plain; snap-on type; green

Item No.: 793-5501/000-017
WMB marking card; as card; for terminal block width 5 - 17.5 mm; stretchable 5 - 5.2 mm; plain; snap-on type; light green

Item No.: 793-5501/000-012
WMB marking card; as card; for terminal block width 5 - 17.5 mm; stretchable 5 - 5.2 mm; plain; snap-on type; orange

Item No.: 793-5501/000-005
WMB marking card; as card; for terminal block width 5 - 17.5 mm; stretchable 5 - 5.2 mm; plain; snap-on type; red

Item No.: 793-5501/000-024
WMB marking card; as card; for terminal block width 5 - 17.5 mm; stretchable 5 - 5.2 mm; plain; snap-on type; violet

Item No.: 793-5501
WMB marking card; as card; for terminal block width 5 - 17.5 mm; stretchable 5 - 5.2 mm; plain; snap-on type; white

Item No.: 793-5501/000-002
WMB marking card; as card; for terminal block width 5 - 17.5 mm; stretchable 5 - 5.2 mm; plain; snap-on type; yellow

Item No.: 2009-115/000-006
WMB-Inline; for Smart Printer; 1500 pieces on roll; stretchable 5 - 5.2 mm; plain; snap-on type; blue

Item No.: 2009-115/000-007
WMB-Inline; for Smart Printer; 1500 pieces on roll; stretchable 5 - 5.2 mm; plain; snap-on type; gray

Item No.: 2009-115/000-023
WMB-Inline; for Smart Printer; 1500 pieces on roll; stretchable 5 - 5.2 mm; plain; snap-on type; green

Item No.: 2009-115/000-017
WMB-Inline; for Smart Printer; 1500 pieces on roll; stretchable 5 - 5.2 mm; plain; snap-on type; light green

Item No.: 2009-115/000-012
WMB-Inline; for Smart Printer; 1500 pieces on roll; stretchable 5 - 5.2 mm; plain; snap-on type; orange

Item No.: 2009-115/000-005
WMB-Inline; for Smart Printer; 1500 pieces on roll; stretchable 5 - 5.2 mm; plain; snap-on type; red

Item No.: 2009-115/000-024
WMB-Inline; for Smart Printer; 1500 pieces on roll; stretchable 5 - 5.2 mm; plain; snap-on type; violet

Item No.: 2009-115
WMB-Inline; for Smart Printer; 1500 pieces on roll; stretchable 5 - 5.2 mm; plain; snap-on type; white

Item No.: 2009-115/000-002
WMB-Inline; for Smart Printer; 1500 pieces on roll; stretchable 5 - 5.2 mm; plain; snap-on type; yellow

1.2.6.3 Marker carrier

Item No.: 2002-161
Adaptor; gray

Item No.: 2009-198
Adaptor; gray

1.2.6.4 Marking strip

Item No.: 2009-110
Marking strips; for Smart Printer; on reel; not stretchable; plain; snap-on type; white

1.2.7 Plug

1.2.7.1 Diode plug

Item No.: 2002-880/1000-411
Component plug; 2-pole; with diode 1N4007; 10.4 mm wide; Operating temperature 85°C max.; gray

 Continued on next page

1.2.7.2 Empty component plug housing

Item No.: 2002-880
Empty component plug housing; 10.4 mm wide; 2-pole; Type 4; gray

1.2.7.3 LED plug

Item No.: 2002-880/1000-541
Component plug; 2-pole; LED (red); 10.4 mm wide; Operating temperature 85°C max.; gray

Item No.: 2002-880/1000-836
Component plug; 2-pole; LED (red); 10.4 mm wide; Operating temperature 85°C max.; gray

Item No.: 2002-880/1000-542
Component plug; 2-pole; LED (red); 10.4 mm wide; Operating temperature 85°C max.; multicoloured

1.2.8 Push-in type wire jumper

1.2.8.1 Jumper

Item No.: 2009-414
Push-in type wire jumper; 1.5 mm²; insulated; 110 mm long; black

Item No.: 2009-414/000-005
Push-in type wire jumper; 1.5 mm²; insulated; 110 mm long; black

Item No.: 2009-416
Push-in type wire jumper; 1.5 mm²; insulated; 250 mm long; black

Item No.: 2009-414/000-006
Push-in type wire jumper; insulated; 110 mm long; black

Item No.: 2009-412
Push-in type wire jumper; insulated; 60 mm long; black

1.2.9 Test and measurement

1.2.9.1 Testing accessories

Item No.: 2002-560
Modular TOPJOB®S connector; modular; for jumper contact slot; 10-pole; 2,50 mm²; gray

Item No.: 2002-511
Modular TOPJOB®S connector; modular; for jumper contact slot; 1-pole; 2,50 mm²; gray

Item No.: 2002-552
Modular TOPJOB®S connector; modular; for jumper contact slot; 2-pole; 2,50 mm²; gray

Item No.: 2002-553
Modular TOPJOB®S connector; modular; for jumper contact slot; 3-pole; 2,50 mm²; gray

Item No.: 2002-554
Modular TOPJOB®S connector; modular; for jumper contact slot; 4-pole; 2,50 mm²; gray

Item No.: 2002-555
Modular TOPJOB®S connector; modular; for jumper contact slot; 5-pole; 2,50 mm²; gray

Item No.: 2002-556
Modular TOPJOB®S connector; modular; for jumper contact slot; 6-pole; 2,50 mm²; gray

Item No.: 2002-557
Modular TOPJOB®S connector; modular; for jumper contact slot; 7-pole; 2,50 mm²; gray

Item No.: 2002-558
Modular TOPJOB®S connector; modular; for jumper contact slot; 8-pole; 2,50 mm²; gray

Item No.: 2002-559
Modular TOPJOB®S connector; modular; for jumper contact slot; 9-pole; 2,50 mm²; gray

Item No.: 2002-549
Spacer module; modular; e.g., for bridging commoned terminal blocks; gray

Item No.: 2009-174
Test plug adapter; for 4 mm Ø test plugs; for testing TOPJOB®S rail-mounted terminal blocks; gray

Item No.: 2009-182
Testing tap; for max. 2.5 mm²; tool-free connection for individual test wires 0.08 - 2.5 mm; gray

Item No.: 2002-649
TOPJOB®S L-type spacer module; modular; e.g., for bridging commoned terminal blocks; gray

Item No.: 2002-611
TOPJOB®S L-type test plug module; modular; 1-pole; 2,50 mm²; gray

1.2.10 Tool

 Continued on next page

1.2.10.1 Operating tool

Item No.: 210-658
Operating tool; Blade: 3.5 x 0.5 mm; with a partially insulated shaft; angled; short; multicoloured

Item No.: 210-720
Operating tool; Blade: 3.5 x 0.5 mm; with a partially insulated shaft; multicoloured

Installation Notes

Conductor termination

All conductor types at a glance

Push-in termination of solid and ferruled conductors

Insert fine-stranded conductors via operating tool.

Removing all conductors via operating tool.

Commoning

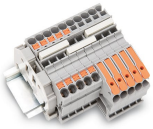

Insert a push-in type jumper bar and push down until it hits the backstop.

Commoning with step-down jumpers.

Step-down jumper (2006-499) commons 6/4 mm² (10/12 AWG) terminal blocks (2206/2204 Series) with 4/2.5/1.5 mm² (AWG 12/14/16) terminal blocks (2204/2202/2201 Series).

Testing

Testing with a 2 mm Ø test plug (max. 42 V).

Marking

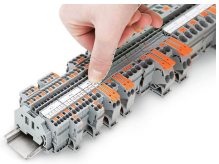

Snapping a marking strip into a marker slot.

Snapping a marking strip into the marker slot.