CEILING MOUNT - DIMENSIONS CEILING MOUNTED

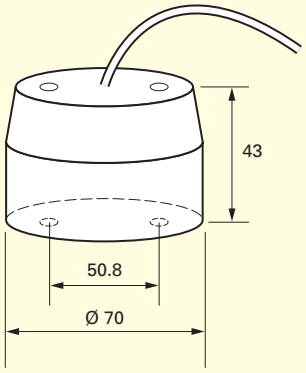

6A Ceiling Switch

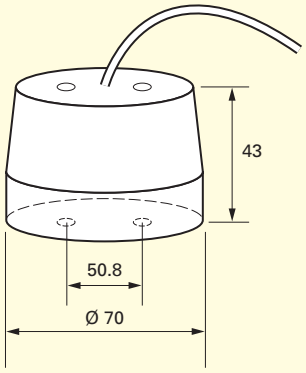

16A Ceiling Switch

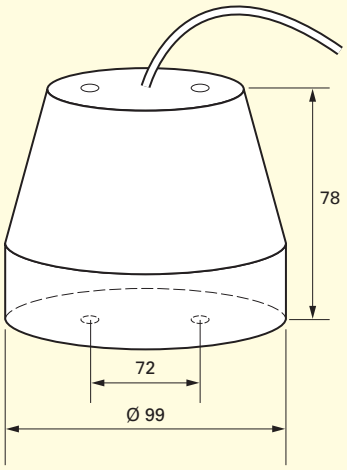

50A Ceiling Switch

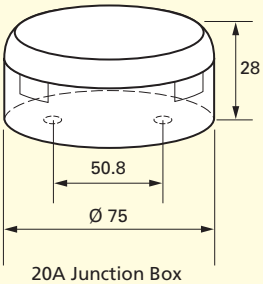

20A Junction Box

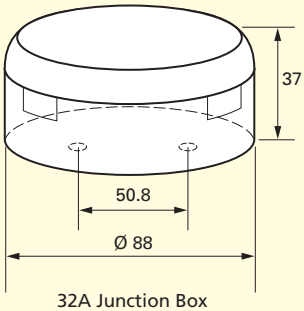

32A Junction Box

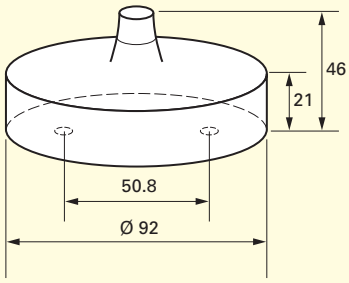

Safety Ceiling Rose

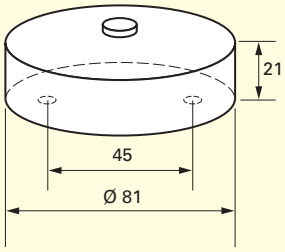

Heavy Duty Ceiling Rose

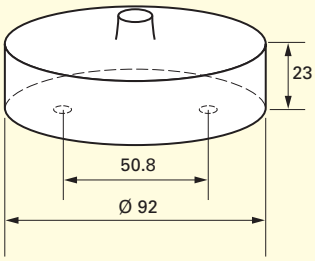

Standard Ceiling Rose

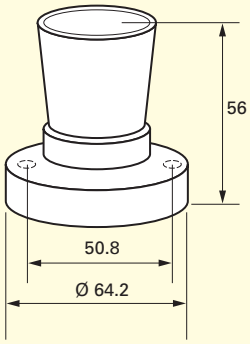

Standard Batten Lampholder

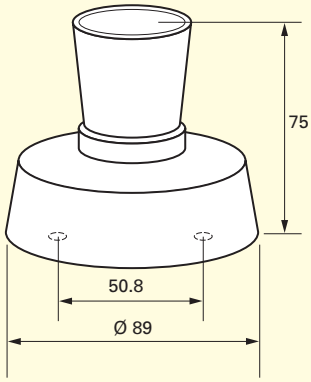

Standard Batten Lampholder

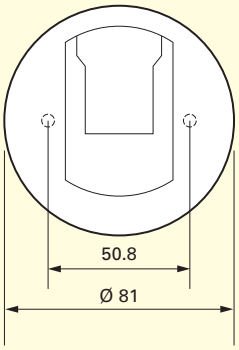

Ceiling Outlet