Installation Sheet

KSR9900-9903

Coria **Traditional Lanterns**

Available Finishes: Black or White

Read these instructions before commencing installation & retain them for future reference.

IP44 ⏚ CE 240V 60W Max.

Important Information

It is recommended that these lanterns are installed by a qualified electrician ensuring the installation complies to current IEE wiring regulations & local building control.
These products are designed for connection to a 240V 50Hz supply.
Any broken or damaged parts should be replaced as soon as possible.
KSR will not accept responsibility for any claims arising from a poor installation.

Important User Advice

Always switch off mains supply before servicing, fitting or replacing lamps.
KSR recommends a maintenance schedule of washing down with soapy water (no abrasive cleaners) and greasing all nut/bolts every 3 months.

Installation Procedure

Wall Lanterns

a) Fix plastic plate to wall using supplied rawl plugs and screws provided.
b) Connect supply leads with terminal block: Brown (L), Blue (N) and Green/Yellow (Earth).
c) Insert the terminal block on the plastic back plate.
d) Attach lantern to plastic plate.
e) Fit suitable lamp not exceeding wattage specified on the lanterns label.
f) Switch on supply and test.

Pillar Lantern

a) Connect supply leads with terminal block: Brown (L), Blue (N) and Green/Yellow (Earth).
b) Attach lantern to solid base.
c) Fit suitable lamp not exceeding wattage specified on the lanterns label.
d) Switch on supply and test.

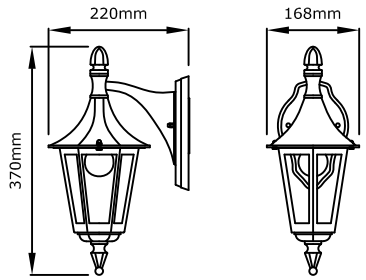

KSR9900

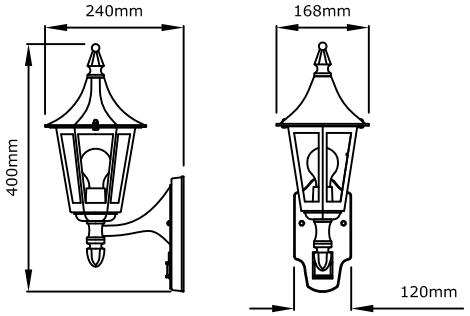

KSR9902

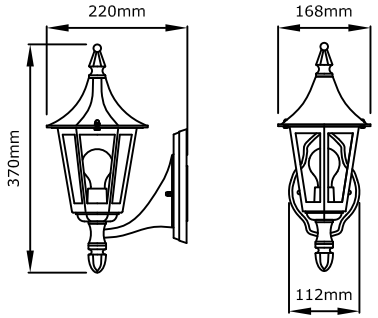

KSR9901

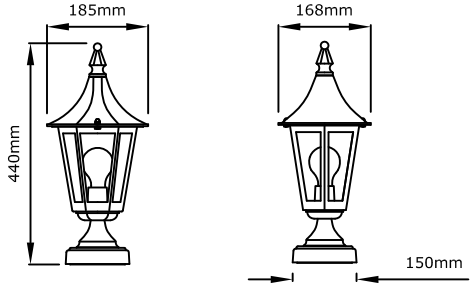

KSR9903

Lamp Details

Lamp Cap: E27
Wattage: 60W (max)

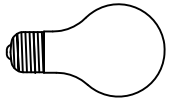

KSR Lighting recommend only branded lamps
For example: Sylvania, GE, Philips or Osram

KSR Lighting Aftersales: 023 92 674343
E-mail: info@ksr-lighting.co.uk