ROSY INGROUND IP67 350 830 96633582

LED Inground Luminaire

Round, walk-over ground recessed IP67 LED luminaire for outdoor applications with stainless steel frames. Diffusors made of tempered glass with frosted finish.Colour Temperature 3000K (warm-white) with colour rendering index Ra80, LED service life: 50000 h before luminous flux is reduced to 80 % of the initial value. Power: 6W, 350 Lumen @ 58lm/W; IK09; IP66 and IP67; 230V. Pre-assembled with 15cm H07RN-F 3G1,5mm² cable (waterstop included) and connector for fast installation. Compatible with THORNeco cable system. Corrosion Class C4 - Minimum distance to Sea 5km. Product is not suitable for chlorine environments. Dimensions: Ø130 x 104 mm, weight: 0.95 kg.

TE_ROSY_F_M_persp.jpg

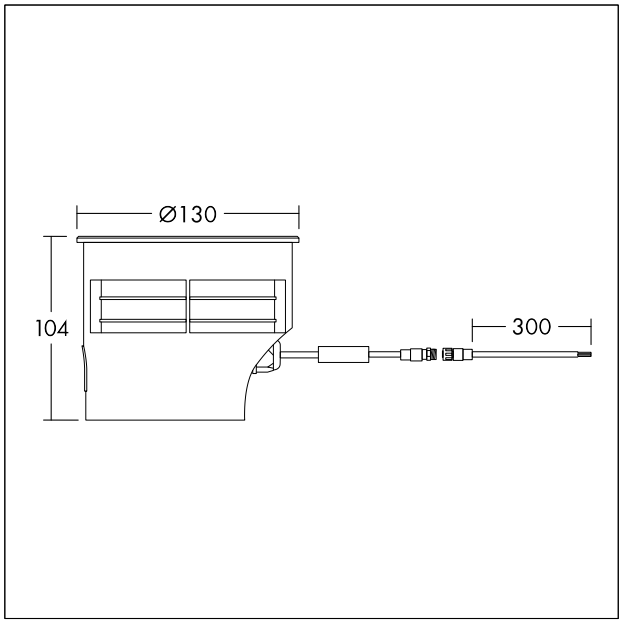

TE_ROSY_M_130.wmf

Light Distribution STD - standard

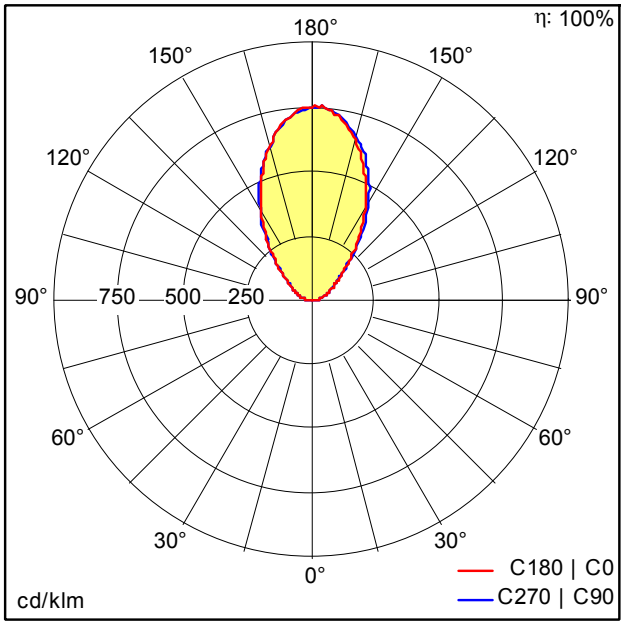

TE_ROSY_INGROUND_IP67_350_830.ldt

- Light Source: LED
- Luminaire luminous flux*: 350 lm
- Luminaire efficacy*: 58 lm/W
- Colour Rendering Index min.: 80
- Correlated colour temperature*: 3000 Kelvin
- Chromaticity tolerance (initial MacAdam): 6
- Rated median useful life*:
  L80 50000h at 25°C
- Ballast: 1x LED_Con
- Luminaire input power*: 6 W Power factor = 0.5
- Dimming: Fixed output
- Maintenance category CIE 97: E - Dust-proof IP5X

This product contains a light source of energy efficiency class E.

All values marked with an * are rated values. Leistung und Lichtstrom unterliegen initial einer Toleranz von +/- 10%, die ähnlichste Farbtemperatur unterliegt initial einer Toleranz von +/- 150K. Unless stated otherwise, the values apply to an ambient temperature of 25°C.

IEC EN 60598-1 RG 1 IP67 IK09 650°C Ta -20 +50

We reserve the right to make technical changes without prior notice. 06.10.2023 © ThornEco