OMRON

Heater Condition Monitoring Device
K7TM

Predictive maintenance by monitoring heater condition

- Able to do trend analysis of condition deterioration of resistance heaters
- Measures and monitors voltage, current and resistance values of heater, regardless of heater temperature control method
- Analyzes the change rate in resistance value of the heater, taking into account the temperature of the heater
- Can be easily retrofitted onto existing equipment without impacting existing control
- Can support up to 2 heaters per monitoring unit
- Can perform measurement up to a heater current of 600 A AC
- Monitor unit alarms and notifies of deterioration when the rate of change in heater resistance value exceeds the threshold

For the most recent information on models that have been certified for safety standards, refer to your OMRON website.

Overview

The K7TM is a device for supporting condition monitoring of heaters by measuring the resistance values of the heaters.
The Unit calculates a resistance value by measuring the voltage at both ends of the heater and its current, so it can measure the resistance value of even the live heater. In addition, by collecting the resistance value data of heaters measured, the Unit can catch signs of heater deterioration or identify trouble-prone heaters to analyze the cause from the data.

The K7TM targets the resistance heating heater.
The representative examples are shown below.

- Sheathed heater
- Cartridge heater
- Band heater
- Cast heater
- SiC (silicon carbide) heater
- Ceramic heater

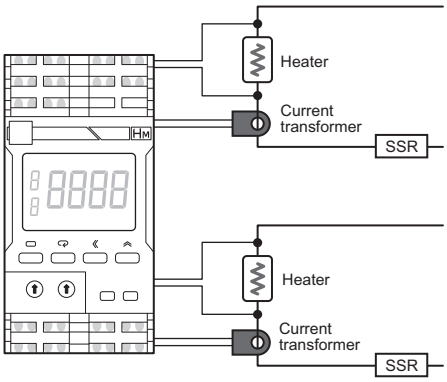

Note: Be aware that the K7TM cannot measure the resistance values of the following heaters:

- Induction heater
- Steam heater
- Oil fan heater or gas fan heater

System Configuration

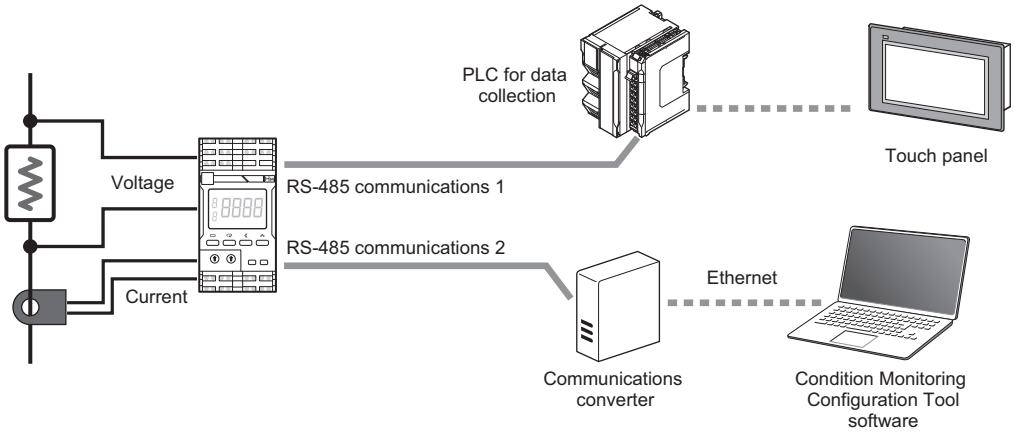

Model Number Structure

Model Number Legend

K7TM - A 2 M □
(1) (2)(3)(4) (5)

(1) Base model	(2) Input type	(3) Number of channels	(4) Unit type	(5) Power supply voltage	Meaning
K7TM					Heater Condition Monitoring Device
	A				Voltage and Current
		2			2 channels
			M		K7TM
				A	100 to 240 V AC power supply
				D	24 V AC/DC power supply

Ordering Information

K7TM

Power supply voltage	Model
100 to 240 V AC	**K7TM-A2MA**
24 V AC/DC	**K7TM-A2MD**

CT (Order Separately)

Rated primary-side current	Model	Model compliant with UL certification
5 A	**K6CM-CICB005**	**K6CM-CICB005-C**
25 A	**K6CM-CICB025**	**K6CM-CICB025-C**
100 A	**K6CM-CICB100**	**K6CM-CICB100-C**
200 A	**K6CM-CICB200**	**K6CM-CICB200-C**
400 A	**K6CM-CICB400**	**K6CM-CICB400-C**
600 A	**K6CM-CICB600**	---

Note: 1. A cable for connection is provided with the CT.
2. K7TM devices are UL-certified when used as a set with a CT model with “-C” at the end. Select a CT with “-C” at the end of the model name if UL certification is required for equipment.
3. The CT input terminals of the K7TM can be connected in either direction of the special CT regardless of polarity.

Accessories (Order Separately)

DIN Tracks	Model
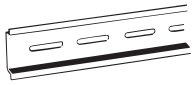	**PFP-100N**
	PFP-50N

End Plate	Model
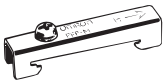	**PFP-M**

Ratings and Specifications

Item		Specifications
Operation power supply	Power supply voltage and frequency	K7TM-A2MA: 100 to 240 V AC, 50/60 Hz K7TM-A2MD: 24 V AC, 50/60 Hz, 24 V DC
	Operating power supply voltage range	85% to 110% of the rated voltage
	Operating frequency range	45 to 65 Hz
	Power consumption	K7TM-A2MA: 8.5 VA max. (100 to 240 V AC)
		K7TM-A2MD: 5.2 VA max. (24 V AC)/ 2.9 W max. (24 V DC)
	Recommend external fuse	T2A, time delay, high-breaking capacity
Ambient operating temperature		-10 to 55°C
Ambient operating humidity		25% to 85%
Storage temperature		-20 to 65°C (with no condensation or icing)
Altitude		2,000 m max.
Insulation resistance		20 mΩ min. Between all external terminals and case; Between all power supply terminals and all other terminals; Between (all voltage input terminals + all CT input terminals) and (all communications terminals + all transistor terminals); Between all voltage input terminals and all CT input terminals; Between the channels of voltage inputs; Between the channels of CT inputs
Dielectric strength		2,000 V AC for 1 minute Between all external terminals and case; Between all power supply terminals and all other terminals; Between (all voltage input terminals + all CT input terminals) and (all communications terminals + all transistor terminals); Between all voltage input terminals and all CT input terminals; Between the channels of voltage inputs; Between the channels of CT inputs
Vibration resistance		Frequency 10 to 55 Hz, 0.35-mm single amplitude, acceleration 50 m/s^2, 10 sweeps of 5 min each in X, Y, and Z directions
Shock resistance		100 m/s^2, 3 times each in X, Y, and Z axes, 6 directions
Degree of protection		IP20
Terminal block type		Push-In Plus
Exterior color		Black (Munsell N 1.5)
Mounting		DIN Track
Weight		Approx. 200 g
Wiring material	Wire type	Solid or Stranded wire
	Wiring material	Copper
	Recommended wires	0.25 to 1.5 mm^2 AWG 24 to AWG 16
	Stripping length (without ferrules)	8 mm
Installation environment		Operation voltage: EN/IEC 61010-1 Pollution Degree 2, Overvoltage category II
		Measurement circuit: EN/IEC 61010-2-030 Pollution Degree 2, CAT II 600 V or CAT III 300 V
Industrial electromagnetic environment		EN/IEC 61326-1 Industrial electromagnetic environment

Measurement Specifications

Item		Specifications
Input range		Current Rated 5 A AC: 0.00 to 5.00 A AC Rated 25 A AC: 0.0 to 25.0 A AC Rated 100 A AC: 0.0 to 100.0 A AC Rated 200 A AC: 0.0 to 200.0 A AC Rated 400 A AC: 0.0 to 400.0 A AC Rated 600 A AC: 0.0 to 600.0 A AC Rated frequency: 50/60 Hz Voltage Rated 120 V AC: 0.0 to 120.0 V AC Rated 240 V AC: 0.0 to 240.0 V AC Rated 480 V AC: 0.0 to 480.0 V AC Rated 600 V AC: 0.0 to 600.0 V AC Rated frequency: 50/60 Hz
Measurable range		Current Rated 5 A AC: 0.00 to 5.50 A AC Rated 25 A AC: 0.0 to 27.5 A AC Rated 100 A AC: 0.0 to 110.0 A AC Rated 200 A AC: 0.0 to 220.0 A AC Rated 400 A AC: 0.0 to 440.0 A AC Rated 600 A AC: 0.0 to 650.0 A AC Voltage Rated 120 V AC: 0.0 to 132.0 V AC Rated 240 V AC: 0.0 to 264.0 V AC Rated 480 V AC: 0.0 to 528.0 V AC Rated 600 V AC: 0.0 to 660.0 V AC
Measurement accuracy		Absolute accuracy of voltage/current: ±0.5% FS ±1 digit to the input range Conditions: • When sine waves are input continuously • Variations in CTs are not included. Repeat accuracy of resistance value (reference value): ±1% rdg ±1 digit Conditions: • When sine waves are input continuously • Variations in CTs are not included.
Measurement target		Resistance heating heater
CH1 voltage input **CH2 voltage input**	**Measurement accuracy**	±0.5% FS ±1 digit
	Input range	0 to 600 V AC, 50/60 Hz
	Recommend external fuse	Class CC, Class J, or Class T with a rated current of 7 A or less
CH1 CT input **CH2 CT input**	**Measurement accuracy**	±0.5% FS ±1 digit
	Input range	0 to 600 A AC, 50/60 Hz

Output Specifications of Transistor Output Terminals

Item		Specifications
Transistor output (Alarm output, Output at error)	Contact form	NPN open collector (normally close)
	Rated voltage	24 V DC (maximum voltage: 26.4 V DC)
	Maximum current	50 mA
	Leakage current when power turning OFF	0.1 mA max.
	Residual voltage	1.5 V max.

Communications Specifications

Item		Specifications
RS-485 communications 1 RS-485 communications 2	Transmission path connection method	RS-485: Multidrop
	Communications method	RS-485 (2-wire, half duplex)
	Cable length	When the baud rate is 115.2 kbps or less, the maximum length is 500 m with a twisted-pair cable. When the baud rate is 230.4 kbps, the maximum length is 200 m with a twisted-pair cable.
	Protocol	Modbus RTU
	Baud rate	9.6 kbps/ 19.2 kbps/ 38.4 kbps/ 57.6 kbps/ 115.2 kbps/ 230.4 kbps
	Data length	Always 8 bits
	Stop bits	Always 1 bit (with parity being even/odd) Always 2 bits (with parity being none)
	Connection configurations	1:1 or 1:N
	Maximum number of Units	32 Units (including the host system)
	Parity	None/Even/Odd
	Send wait time	0 to 99 ms

Ratings and Specifications of CT*1

Model / Item	K6CM-CICB005(-C)	K6CM-CICB025(-C)	K6CM-CICB100(-C)	K6CM-CICB200(-C)	K6CM-CICB400(-C)	K6CM-CICB600
Construction	Internal split type					
Primary-side rated current	5 A	25 A	100 A	200 A	400 A	600 A
Rated voltage	600 V AC					
Secondary winding	3,000 turns				6,000 turns	9,000 turns
Insulation resistance	Between output terminal and case: 50 mΩ min					
Dielectric strength	Between output terminal and case: 2,000 V AC for 1 minute					
Protective element	7.5 V clamp element					
Allowable number of attachments and detachments	100 times					
Diameter of wire attachable *2	7.9 mm dia. max.	9.5 mm dia. max.	14.5 mm dia. max.	24.0 mm dia. max.	35.5 mm dia. max.	
Operating temperature and humidity range	-20 to 60°C, 25% to 85% (with no condensation or icing)					
Storage temperature and humidity range	-30 to 65°C, 25% to 85% (with no condensation or icing)					
Supplied cable length	2.9 m					
Supplied cable terminal	K7TM side: Ferrule, CT side: Round crimp terminal					
Degree of protection	IP20					

*1. To comply with UL certification, refer to *Conformance to Safety Standards* (page 16).
*2. When you use a flat wire, refer to the outline dimensional drawing of the relevant CT and use a CT with a larger diameter. However, use the CT within the range of its rated current.

Nomenclature

Front Section

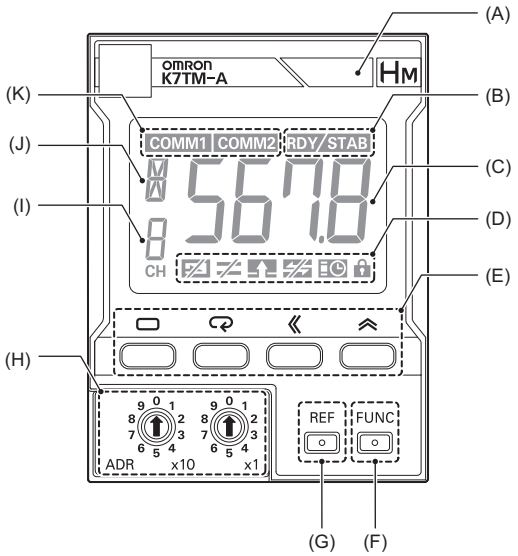

Symbol	Name	Function	
(A)	Alarm output indicator	Indicates the alarm judgment results in three colors. Green: Normal Yellow: Warning (At least one of the heater deterioration alarm (warning) and the last resistance value change rate alarm has occurred.) Red: Critical (At least one of the heater deterioration alarm (critical) and the heater burnout alarm has occurred.) It will turn red also if any other fatal failure occurs. The red light overrides the yellow light. Not lit: It is not lit when the measurement operation has stopped.	
(B)	Monitoring step indicator display	**RDY**	Indicates the registration status of a reference resistance value of the current channel. Not lit: Reference resistance value not registered Flashing: Reference resistance value under evaluation Lit: Reference resistance value registered
		STAB	Indicates the monitoring status of the current channel. Not lit: Waiting for stabilization ✻1 Lit: Stabilized Flashing: Unstabilization error
(C)	Main display	Indicates a measurement value or a set value.	
(D)	Status display	**IN**	Indicates whether there are voltage and current inputs. Not lit: Voltage and current input on all channels ✻1 Flashing: Voltage and current not input except on the current channel Lit: Voltage and current not input on the current channel
		FAIL	Indicates the occurrence status of a measurement error. Not lit: A measurement error not generated on all channels ✻1 Flashing: A measurement error generated except on the current channel Lit: A measurement error generated on the current channel
		ALM	Indicates that an alarm has occurred. Not lit: An alarm not generated on all channels ✻1 Flashing: An alarm generated except on the current channel Lit: An alarm generated on the current channel
		AGE	Lit as a guideline when it is time to replace the K7TM.
		LOCK	Lit when setting change protection is enabled.
(E)	Operation Keys	Level Key (▭)	Selects the setting level.
		Mode Key (⊂⊃)	Switches setting parameter displays, on the setting level that allows you to change the parameter. Switches measurement value displays (reference resistance value change rate, resistance value, voltage value, current value, power, temperature, and alarm status), on the Operation Level.
		Shift Key (⟪)	Moves from the parameter name display state to the monitoring state. Puts the parameter value into the changeable state. Used for digit shift, in the setting change state.
		Up Key (⌃⌃)	Increments the value when the parameter is in the setting change state. Switches channels of the measurement value or parameter to display, in the measurement value display state or the parameter display state.

Symbol	Name	Function		
(F)	**FUNC** Key (Function Key)	Releases the alarm latch.		
(G)	**REF** Key (Reference Key)	Starts resistance reference value registration for the current channel. When the reference resistance value is under evaluation, cancels reference resistance value registration.		
(H)	Unit number setting switch	Sets the Unit number.		
(I)	CH display	Indicates the channel of the currently displayed parameter.		
(J)	LVL/Measurement value mark display	Operation Level: Indicates the currently displayed measurement value mark. Other levels: Indicates the mark showing the setting level.		
		Level	Measurement value mark	Meaning
		Operation Level	Δ	Reference Resistance Value Change Rate
			R	Resistance Value
			V	Voltage Value
			C	Current Value
			S	Power
			t	Temperature
			A	Alarm Status
		Setting level	Level mark	Meaning
		Adjustment Level (Common)	A	Shows that you are on the Adjustment Level (Common).
		Adjustment Level (Power)	b	Shows that you are on the Adjustment Level (Power).
		Adjustment Level (Temperature)	C	Shows that you are on the Adjustment Level (Temperature).
		Initial Setting Level	0	Shows that you are on the Initial Setting Level.
		Communications Setting 1 Level	1	Shows that you are on the Communications Setting 1 Level.
		Communications Setting 2 Level	2	Shows that you are on the Communications Setting 2 Level.
(K)	Communications display	**COMM1**	Lit when the communications 1 terminals (for host system) received a command to the local address.	
		COMM2	Lit when the communications 2 terminals (for Condition Monitoring Configuration Tool software or IoT gateway) performed normal communications.	

***1.** Not lit also when the measurement operation has stopped.

Terminal Section

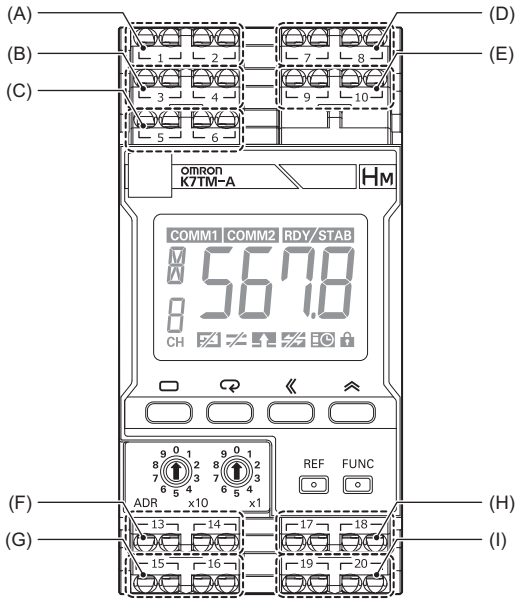

Symbol	Terminal Numbers	Name	Function
(A)	1 and 2	Operation power supply	To be connected with the operation power supply to the K7TM.
(B)	3 and 4	RS-485 communications 1	To be connected with the RS-485 communications line. This is a communications terminal for communicating with the host system. Number 3: +, Number 4: -
(C)	5 and 6	RS-485 communications 2	To be connected with the RS-485 communications line. This is a communications terminal for communicating with the Condition Monitoring Configuration Tool software or the IoT gateway. Number 5: +, Number 6: -
(D)	7 and 8	CH1 voltage input	To be connected with both ends of a heater to measure the voltage applied to the heater. This is an input for the 1st channel of the two channels measurable.
(E)	9 and 10	CH1 CT input	To be connected with the CT, connected to a heater current measuring point, to measure the current running down the heater. This is an input for the 1st channel of the two channels measurable.
(F)	13 and 14	Alarm output	Compares the resistance value change rate and the alarm threshold to produce an alarm output. Number 13: Collector of the NPN transistor, Number 14: Emitter of the NPN transistor.
(G)	15 and 16	Output at error	Produces a Output at error, in case of a measurement error or a self-diagnosis error. Number 15: Collector of the NPN transistor, Number 16: Emitter of the NPN transistor.
(H)	17 and 18	CH2 voltage input	To be connected with both ends of a heater to measure the voltage applied to the heater. This is an input for the 2nd channel of the two channels measurable.
(I)	19 and 20	CH2 CT input	The CT connected to the heater current measurement point is wired to this terminal, and the K7TM measures the heater current. This is the second input of the two measurable channels.

Connection Diagram

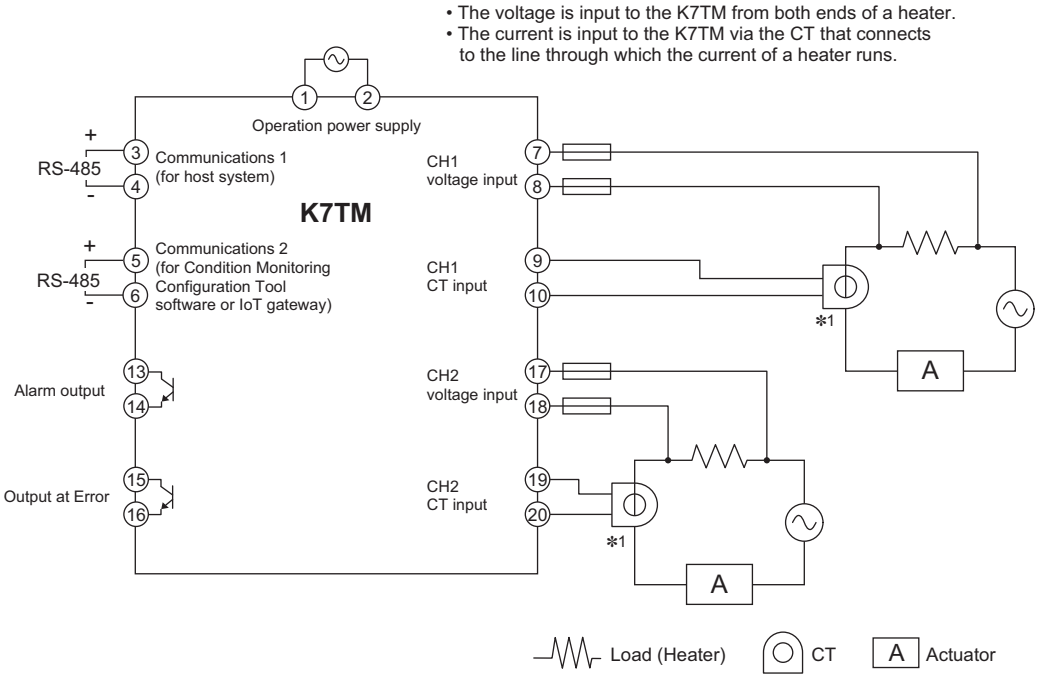

***1.** The CT input terminals of the K7TM can be connected in either direction of the special CT regardless of polarity.

Dimensions

(Unit: mm)

K7TM

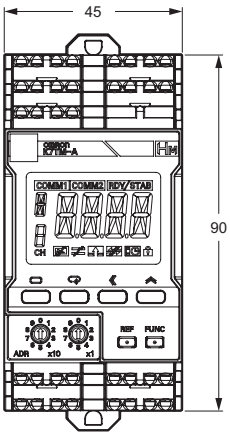

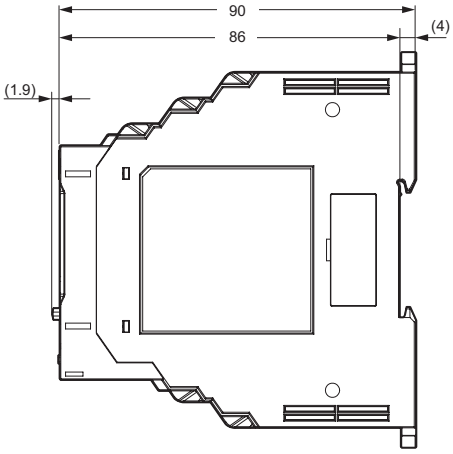

Special CT (Current Transformer)

K6CM-CICB005-C
K6CM-CICB005

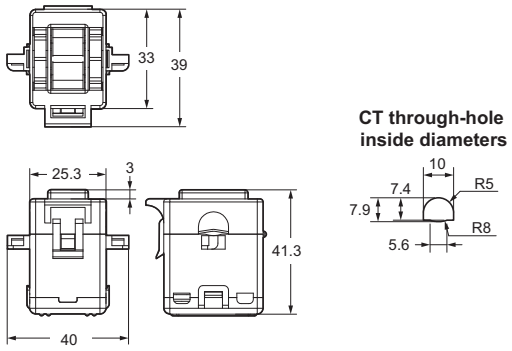

K6CM-CICB025-C
K6CM-CICB025

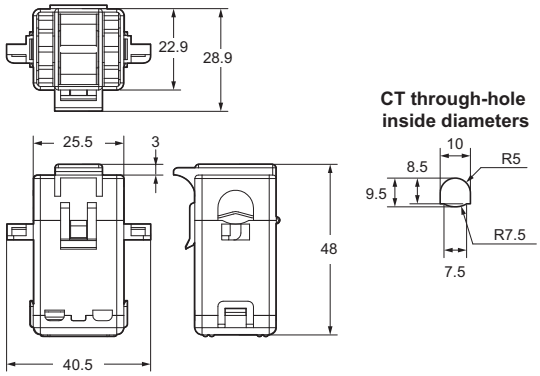

K6CM-CICB100-C
K6CM-CICB100

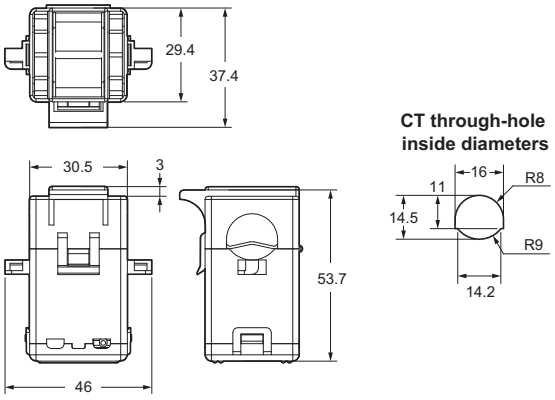

K6CM-CICB200-C
K6CM-CICB200

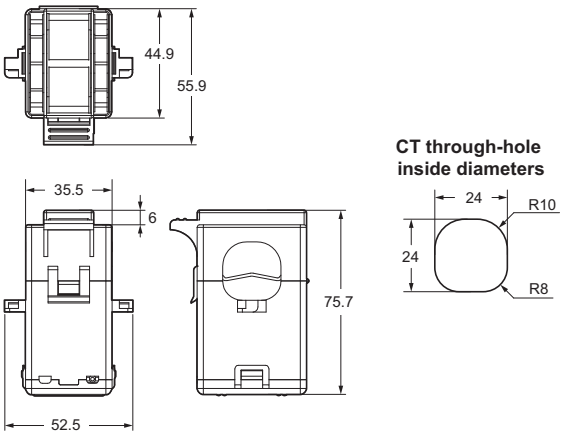

K6CM-CICB400-C
K6CM-CICB400
K6CM-CICB600

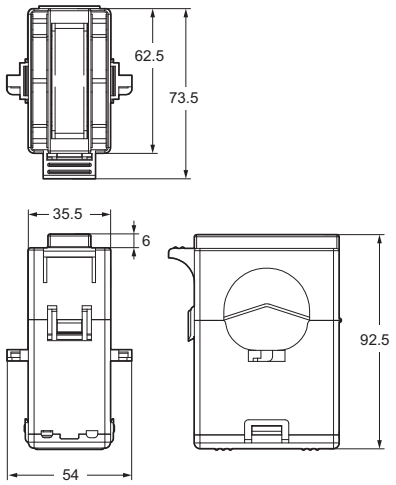

CT through-hole inside diameters

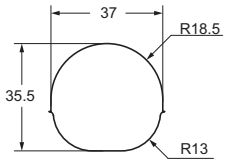

CT-supplied cable ✻

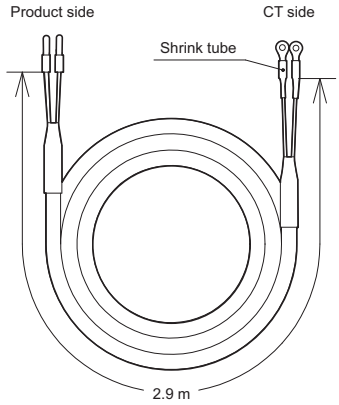

✻ The CT-supplied cable is attached to the CT.

Note: 1. The "-C" at the end of the special CTs refer to the models compliant with UL certification. Models without "-C" can also be used if UL certification is not required. The ratings and specifications are common to all of them.
2. To comply with UL certification for the special CT, refer to *Conformance to Safety Standards* (page 16).
3. The CT input terminals of the K7TM can be connected in either direction of the special CT regardless of polarity.

Optional Products for DIN Track Mounting

DIN Tracks

PFP-100N
PFP-50N

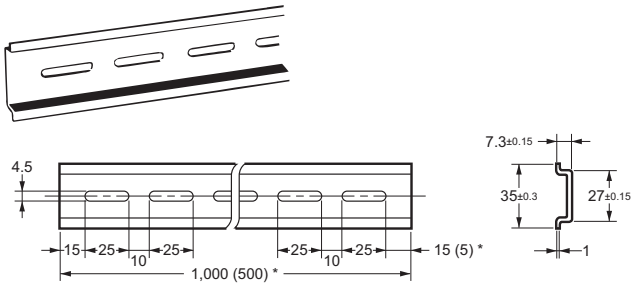

* Dimensions in parentheses are for the PFP-50N.

End Plate

PFP-M

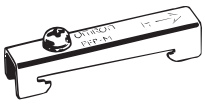

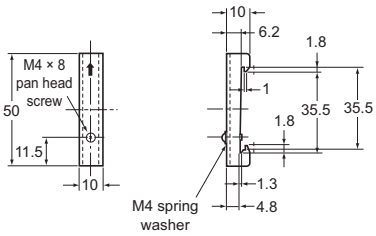

Parameters

Parameter Flow

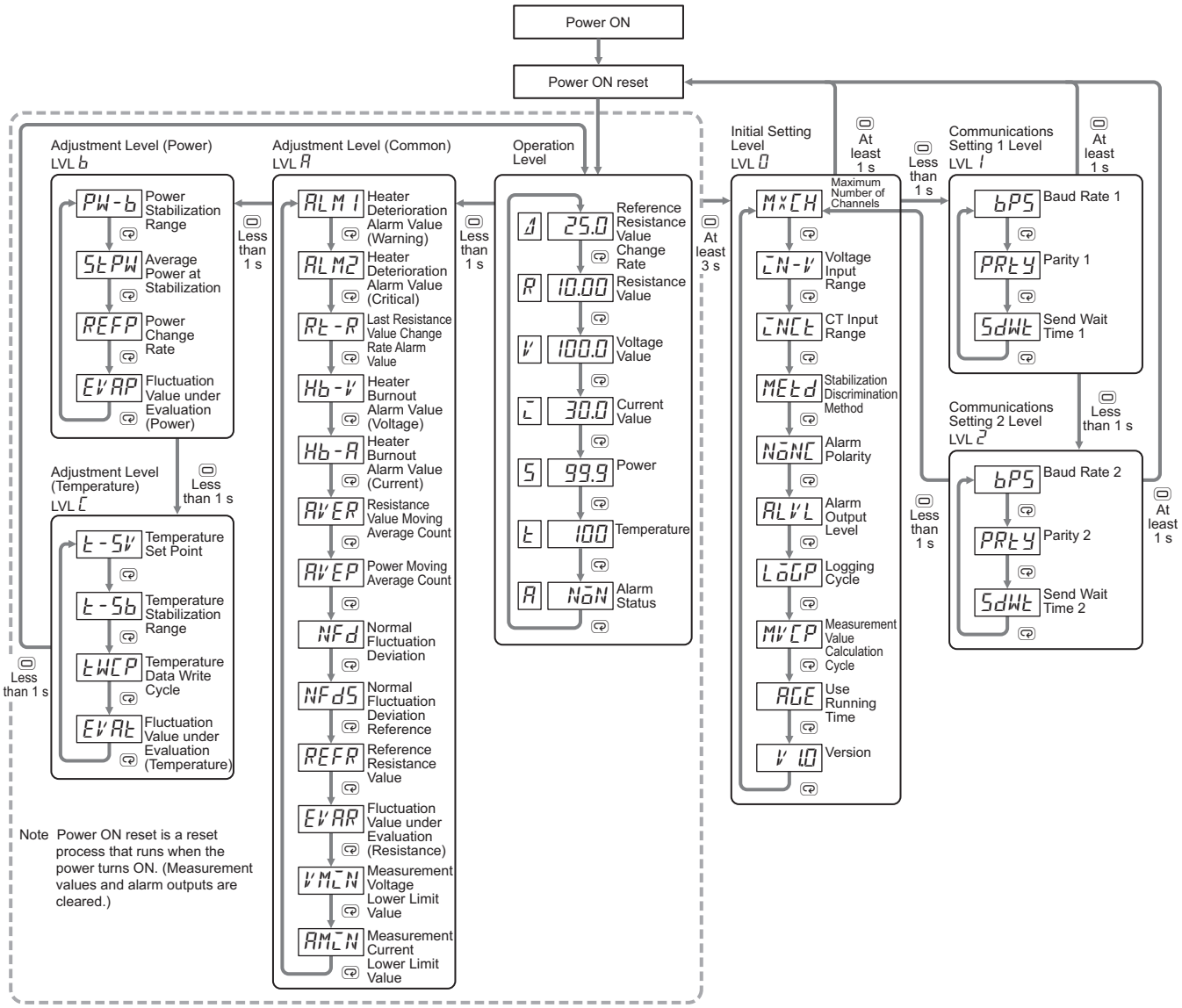

Parameters List

Level	Parameter name	Characters	Setting (monitoring) range	Default value	Description
Operation	Reference Resistance Value Change Rate	Δ	-100.0 to 999.9 (%)	Monitored value just displayed	The resistance value change rate is calculated on the basis of the *Reference Resistance Value*.
	Resistance Value	R	0.000 to 9.999 (Ω) 10.00 to 99.99 (Ω) 100.0 to 999.9 (Ω)	Monitored value just displayed	This is a resistance value of the heater.
	Voltage Value	V	120 V range: 0.0 to 132.0 (V) 240 V range: 0.0 to 264.0 (V) 480 V range: 0.0 to 528.0 (V) 600 V range: 0.0 to 660.0 (V)	Monitored value just displayed	This is a voltage value applied to the heater.
	Current Value	C	5 A range: 0.00 to 5.50 (A) 25 A range: 0.0 to 27.5 (A) 100 A range: 0.0 to 110.0 (A) 200 A range: 0.0 to 220.0 (A) 400 A range: 0.0 to 440.0 (A) 600 A range: 0.0 to 650.0 (A)	Monitored value just displayed	This is a current value applied to the heater.
	Power	S	0.0 to 429.0 (kVA)	Monitored value just displayed	This is an apparent power of the heater.
	Temperature	t	-1,999 to 9,999 (°C/°F)	Monitored value just displayed	This is a temperature used as a reference for checking the heater for stability.
	Alarm Status	A	NON: Normal ALM1: Heater Deterioration Alarm (Warning) ALM2: Heater Deterioration Alarm (Critical) Rt-R: Last Resistance Value Change Rate Alarm Value Hb: Heater Burnout Alarm	Monitored value just displayed	This parameter displays the present alarm status.
Adjustment (Common)	Heater Deterioration Alarm Value (Warning)	ALM1	0.1 to 999.9 (%)	3.0 (%)	Set the alarm value (caution) for heater deterioration.
	Heater Deterioration Alarm Value (Critical)	ALM2	0.1 to 999.9 (%)	5.0 (%)	Set the alarm value (warning) for heater deterioration.
	Last Resistance Value Change Rate Alarm Value	Rt-R	0.1 to 999.9 (%)	25.0 (%)	Set the alarm value for last resistance value change rate alarm value.
	Heater Burnout Alarm Value (Voltage)	Hb-V	0.0 to 99.9 (% FS)	40.0 (% FS)	Set the voltage conditions for heater burnout alarm.
	Heater Burnout Alarm Value (Current)	Hb-A	0.0 to 99.9 (% FS)	1.0 (% FS)	Set the current conditions for heater burnout alarm.
	Resistance Value Moving Average Count	AVER	LOW: Moving Average Count of 10 MCd: Moving Average Count of 20 HCGH: Moving Average Count of 40	LOW	Set the moving average for resistance value.
	Power Moving Average Count	AVEP	LOW: Moving Average Count of 10 MCd: Moving Average Count of 20 HCGH: Moving Average Count of 40	LOW	Set the moving average for power.
	Normal Fluctuation Deviation	NFd	0.1 to 999.9 (%)	1.0 (%)	Set the range of resistance values required for the K7TM determining that the heater temperature is stabilized.
	Normal Fluctuation Deviation Reference	NFdS	Same range as Resistance Value	Monitored value just displayed	This is a moving average value of the past 10 resistance values calculated in the stabilized state.
	Reference Resistance Value	REFR	Same range as Resistance Value	Monitored value just displayed	This is a reference resistance value registered by the operation command *Reference Resistance Value Registration Start*.
	Fluctuation Value under Evaluation (Resistance)	EVAR	Same range as Reference Resistance Value Change Rate	Monitored value just displayed	In the *Reference Resistance Value Evaluation State*, the value for which the reference resistance value change rate has fluctuated most sharply will be retained.
	Measurement Voltage Lower Limit Value	VMCN	3.0 to 99.9 (% FS)	3.0 (% FS)	Set the lowest voltage conditions for calculating resistance values.
	Measurement Current Lower Limit Value	AMCN	3.5 to 99.9 (% FS)	3.5 (% FS)	Set the lowest voltage conditions for calculating resistance values.

Level	Parameter name	Characters	Setting (monitoring) range	Default value	Description
Adjustment (Power)	Power Stabilization Range	PW-b	0.1 to 999.9 (%)	20.0 (%)	Set the range of powers that the K7TM judges to be stabilized.
	Average Power at Stabilization	StPW	Same range as Power	Monitored value just displayed	This is an average power at stabilization registered by the operation command, *Reference Resistance Value Registration Start*.
	Power Change Rate	REFP	-100.0 to 999.9 (%)	Monitored value just displayed	This is a power change rate based on the *Average Power at Stabilization*.
	Fluctuation Value under Evaluation (Power)	EVAP	-100.0 to 999.9 (%)	Monitored value just displayed	In the *Reference Resistance Value Evaluation State*, the value for which the power change rate has fluctuated most sharply will be retained.
Adjustment (Temperature)	Temperature Set Point	t-SV	0 to 9,999 (°C/°F)	0 (°C/°F)	Set the reference for temperature stabilization range that the K7TM judged to be stabilized.
	Temperature Stabilization Range	t-Sb	1 to 9,999 (°C/°F)	10 (°C/°F)	Set the temperature stabilization range that the K7TM judged to be stabilized.
	Temperature Data Write Cycle	tWCP	1 to 999 (s)	10 (s)	Set the time during which the K7TM waits for temperature to be written from the host system.
	Fluctuation Value under Evaluation (Temperature)	EVAt	Same range as Temperature	Monitored value just displayed	In the *Reference Resistance Value Evaluation State*, the value for which temperature is most different from the temperature set point will be retained.
Initial Setting	Maximum Number of Channels	MxCH	1 to 2	1	Set the number of input channels to use.
	Voltage Input Range	CN-V	120V 240V 480V 600V	120V	Set the voltage input range, according to the voltage applied to the heater.
	CT Input Range	CNCt	5A 25A 100A 200A 400A 600A	25A	Set the CT input range, according to the CT to use.
	Stabilization Discrimination Method	MEtd	Md-1: Power Md-2: Temperature	Md-1	Set the method by which to monitor the heater.
	Alarm Polarity	NāNC	N-ō: Normally open N-C: Normally close	N-C	Set whether to turn the alarm output contacts ON or OFF during normal operation.
	Alarm Output Level	ALVL	LōW: Warning or Critical HCGH: Critical	HCGH	Set the level where the alarm output is produced when an alarm occurs.
	Logging Cycle	LōGP	10 to 9,999 (in 10 times)	100 (in 10 times) (approx. 1 day)	Set the cycle in which to keep a log of the last resistance value change rate, voltage, and current.
	Measurement Value Calculation Cycle	MVCP	1 to 999 (s)	100 (s)	Set the cycle in which to calculate the measurement values.
	Use Running Time	AGE	ōFF: Not used ōN: Used	ōFF	Set whether to inform you with the [AGE] Indicator that the K7TM has reached an approximate period in which it stops functioning at its full capacity due to the deterioration of the electrolytic capacitor characteristics.
	Version	V 1.0	---	---	Displays the current software version.
Communications Setting 1, 2	Baud Rate 1 and 2	bPS	9.6 (kbps) 19.2 (kbps) 38.4 (kbps) 57.6 (kbps) 115.2 (kbps) 230.4 (kbps)	115.2 (kbps)	Set the baud rate of the communications terminals 1 or 2.
	Parity 1 and 2	PRtY	NōNE: None EVEN: Even ōdd: Odd	EVEN	Set the parity of the communications terminals 1 or 2.
	Send Wait Time 1 and 2	SdWt	0 to 99 (ms)	20 (ms)	Set the send wait time of the communications terminals 1 or 2.

Condition Monitoring Configuration Tool

Starting in February 2024, OMRON releases a software tool for configuring all models of condition monitoring devices. The unified configuration and verification environment of the software tool makes it easy to introduce condition monitoring devices. While the existing tools for condition monitoring devices will remain functional, be advised that OMRON has no plans to provide support for updates or related services. Going forward, use the Condition Monitoring Configuration Tool instead of the existing tools.

Product name	Model	Software Tool	The last day to download the tools		The new Tool will be available from February 2024 onwards
Motor Condition Monitoring Device	K6CM ✻1	Motor Condition Monitoring Tool ✻2	30 November, 2024		
Thermal Condition Monitoring Device	K6PM-TH	K6PM-TH Software Tool	30 June, 2024		Condition Monitoring Configuration Tool
Insulation Resistance Monitoring Device	K7GE-MG	K7GE-MG Logging Tool			
Heater Condition Monitoring Device	K7TM	K7TM Configuration Tool			
Advanced Motor Condition Monitoring Device	K7DD	K7DD Support Tool			

✻1. Can be used only for K6CM-CI2, K6CM-VB with EIP CPU version 1.20 or higher, and K6CM-IS with EIP CPU version 1.20 or higher.
✻2. The CD-ROM for the Motor Condition Monitoring Tool will no longer be supplied with K6CM manufactured in December 2024 or later.

Operating Environment

Supported OS	Windows 10 (Version1607 or later) and 11 (Japanese or English) 64 bit
PC specifications	CPU: 1 GHz or higher, 64 bit processor Memory: 2 GB or higher Disk reserved area capacity: 20 GB or more Monitor resolution: 1920 × 1080 Others: LAN port (for network connection)

How to obtain the Condition Monitoring Configuration Tool

Only download is available.
https://www.ia.omron.com/cmc_tool

Communications converter for K7GE-MG, K7TM and K7DD

To ensure compatibility, use a commercially available communications converter for protocol conversion to connect K7GE-MG, K7TM, or K7DD, which support the Modbus RTU protocol via serial communications, with the Tool, which supports the Modbus TCP protocol through Ethernet. OMRON has completed the evaluation using MOXA MGate MB3170.

Conformance to Safety Standards

- The protection provided by the device may be impaired if the device is used in a manner that is not specified by the manufacturer.
- To use the Product, install it as an embedded device within a control panel.
- To use the special CT, install it in the same control panel as the Product with a sufficient clearance from other devices.
- For the special CT, use one with -C suffixed to the model.
- For the operation power supply and voltage inputs, use recommended fuses that are externally installed.
- Use the voltage and CT inputs under conditions specified for the measurement category.
- The maximum temperature of the terminal block is 65°C. Therefore, use wires with a rated temperature of 65°C or higher.
- For the wire passing through the primary side of the special CT, use an insulated wire with basic insulation or higher degree of insulation that complies with Table 1.
- Using Table 2 as a guideline, select such a wire as the case temperature of the special CT will be 65°C or less.

Table 1

Load (heater) circuit voltage	AWM (Appliance Wiring Material) Wires Rated voltage and size	
	Overvoltage category II Measurement category II	Overvoltage category III Measurement category III
> 300 ≤ 600 V	600 V min. 1 AWG min.	
> 150 ≤ 300 V	300 V min. No restriction on size	600 V min. 1 AWG min.
≤ 150 V	150 V min. No restriction on size	150 V min. No restriction on size

Table 2

Special CT model	Wire size	Ambient operating temperature of K7TM and special CT
K6CM-CICB005-C	24 AWG min. (0.25 mm^2 min.)	55°C max.
K6CM-CICB025-C	12 AWG min. (3.5 mm^2 min.)	55°C max.
K6CM-CICB100-C	4 AWG (22 mm^2)	45°C max.
	2 AWG (35 mm^2)	50°C max.
	1 AWG min. (50 mm^2 min.)	55°C max.
K6CM-CICB200-C	2/0 AWG (70 mm^2)	45°C max.
	3/0 AWG min. (95 mm^2 min.)	50°C max.
K6CM-CICB400-C	3/0 AWG min. x 2 wires (95 mm^2 min. x 2 wires)	40°C max.

●Measurement category

The measurement category classifies the places and equipment which you can connect to the measurement terminals, as prescribed in EN/IEC 61010-2-030. Each category is as follows.

CAT II: Energy-consuming equipment with an energy supply from fixed wiring equipment (such as a power outlet)

CAT III: Equipment in fixed wiring equipment that particularly demands equipment reliability and effectiveness

CAT IV: Equipment to use at the electrical service entry

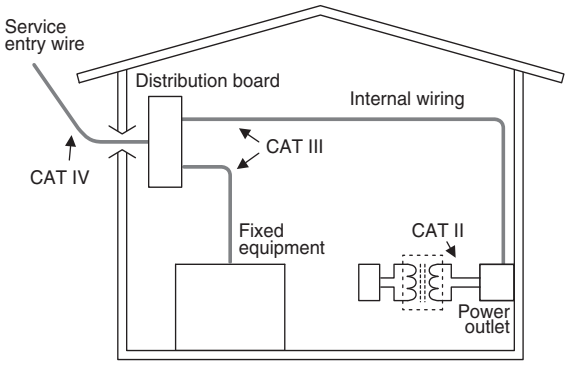

Terms and Conditions Agreement

Read and understand this catalog.

Please read and understand this catalog before purchasing the products. Please consult your OMRON representative if you have any questions or comments.

Warranties.

(a) Exclusive Warranty. Omron's exclusive warranty is that the Products will be free from defects in materials and workmanship for a period of twelve months from the date of sale by Omron (or such other period expressed in writing by Omron). Omron disclaims all other warranties, express or implied.

(b) Limitations. OMRON MAKES NO WARRANTY OR REPRESENTATION, EXPRESS OR IMPLIED, ABOUT NON-INFRINGEMENT, MERCHANTABILITY OR FITNESS FOR A PARTICULAR PURPOSE OF THE PRODUCTS. BUYER ACKNOWLEDGES THAT IT ALONE HAS DETERMINED THAT THE PRODUCTS WILL SUITABLY MEET THE REQUIREMENTS OF THEIR INTENDED USE.

Omron further disclaims all warranties and responsibility of any type for claims or expenses based on infringement by the Products or otherwise of any intellectual property right. (c) Buyer Remedy. Omron's sole obligation hereunder shall be, at Omron's election, to (i) replace (in the form originally shipped with Buyer responsible for labor charges for removal or replacement thereof) the non-complying Product, (ii) repair the non-complying Product, or (iii) repay or credit Buyer an amount equal to the purchase price of the non-complying Product; provided that in no event shall Omron be responsible for warranty, repair, indemnity or any other claims or expenses regarding the Products unless Omron's analysis confirms that the Products were properly handled, stored, installed and maintained and not subject to contamination, abuse, misuse or inappropriate modification. Return of any Products by Buyer must be approved in writing by Omron before shipment. Omron Companies shall not be liable for the suitability or unsuitability or the results from the use of Products in combination with any electrical or electronic components, circuits, system assemblies or any other materials or substances or environments. Any advice, recommendations or information given orally or in writing, are not to be construed as an amendment or addition to the above warranty.

See http://www.omron.com/global/ or contact your Omron representative for published information.

Limitation on Liability; Etc.

OMRON COMPANIES SHALL NOT BE LIABLE FOR SPECIAL, INDIRECT, INCIDENTAL, OR CONSEQUENTIAL DAMAGES, LOSS OF PROFITS OR PRODUCTION OR COMMERCIAL LOSS IN ANY WAY CONNECTED WITH THE PRODUCTS, WHETHER SUCH CLAIM IS BASED IN CONTRACT, WARRANTY, NEGLIGENCE OR STRICT LIABILITY.

Further, in no event shall liability of Omron Companies exceed the individual price of the Product on which liability is asserted.

Suitability of Use.

Omron Companies shall not be responsible for conformity with any standards, codes or regulations which apply to the combination of the Product in the Buyer's application or use of the Product. At Buyer's request, Omron will provide applicable third party certification documents identifying ratings and limitations of use which apply to the Product. This information by itself is not sufficient for a complete determination of the suitability of the Product in combination with the end product, machine, system, or other application or use. Buyer shall be solely responsible for determining appropriateness of the particular Product with respect to Buyer's application, product or system. Buyer shall take application responsibility in all cases.

NEVER USE THE PRODUCT FOR AN APPLICATION INVOLVING SERIOUS RISK TO LIFE OR PROPERTY OR IN LARGE QUANTITIES WITHOUT ENSURING THAT THE SYSTEM AS A WHOLE HAS BEEN DESIGNED TO ADDRESS THE RISKS, AND THAT THE OMRON PRODUCT(S) IS PROPERLY RATED AND INSTALLED FOR THE INTENDED USE WITHIN THE OVERALL EQUIPMENT OR SYSTEM.

Programmable Products.

Omron Companies shall not be responsible for the user's programming of a programmable Product, or any consequence thereof.

Performance Data.

Data presented in Omron Company websites, catalogs and other materials is provided as a guide for the user in determining suitability and does not constitute a warranty. It may represent the result of Omron's test conditions, and the user must correlate it to actual application requirements. Actual performance is subject to the Omron's Warranty and Limitations of Liability.

Change in Specifications.

Product specifications and accessories may be changed at any time based on improvements and other reasons. It is our practice to change part numbers when published ratings or features are changed, or when significant construction changes are made. However, some specifications of the Product may be changed without any notice. When in doubt, special part numbers may be assigned to fix or establish key specifications for your application. Please consult with your Omron's representative at any time to confirm actual specifications of purchased Product.

Errors and Omissions.

Information presented by Omron Companies has been checked and is believed to be accurate; however, no responsibility is assumed for clerical, typographical or proofreading errors or omissions.

Note: Do not use this document to operate the Unit.

OMRON Corporation **Industrial Automation Company**

Kyoto, JAPAN **Contact : www.ia.omron.com**

Regional Headquarters

OMRON EUROPE B.V.
Wegalaan 67-69, 2132 JD Hoofddorp
The Netherlands
Tel: (31) 2356-81-300 Fax: (31) 2356-81-388

OMRON ELECTRONICS LLC
2895 Greenspoint Parkway, Suite 200
Hoffman Estates, IL 60169 U.S.A.
Tel: (1) 847-843-7900 Fax: (1) 847-843-7787

OMRON ASIA PACIFIC PTE. LTD.
438B Alexandra Road, #08-01/02 Alexandra
Technopark, Singapore 119968
Tel: (65) 6835-3011 Fax: (65) 6835-3011

OMRON (CHINA) CO., LTD.
Room 2211, Bank of China Tower,
200 Yin Cheng Zhong Road,
PuDong New Area, Shanghai, 200120, China
Tel: (86) 21-6023-0333 Fax: (86) 21-5037-2388

Authorized Distributor:

CSM_3_3
Cat. No. N228-E1-06 0524 (1121)