XPSVNE is replaced by XPSUVN

XPSVNE

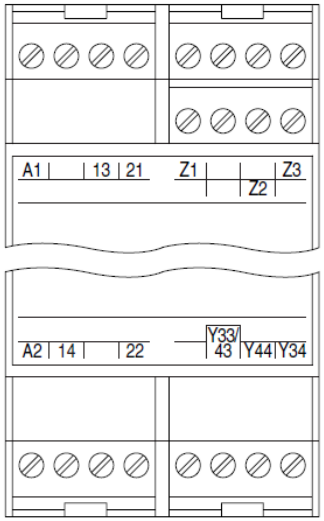

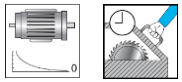

XPSUVN

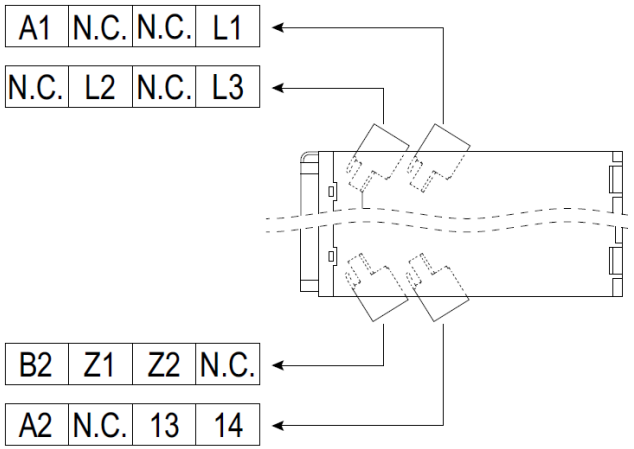

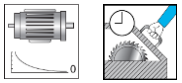

Commercial Reference	Commercial Reference
XPSVNE1142HSP	**XPSUVN11AP**
XPSVNE1142LFP	**XPSUVN11AP**
XPSVNE1142P	**XPSUVN11AP**
XPSVNE3442HSP	**XPSUVN31AP**

Commercial Reference	Commercial Reference
XPSVNE3442LFP	**XPSUVN31AP**
XPSVNE3442P	**XPSUVN31AP**
XPSVNE3742HSP	**XPSUVN31AP**
XPSVNE3742P	**XPSUVN31AP**

XPSVNE is replaced by XPSUVN

XPSVNE

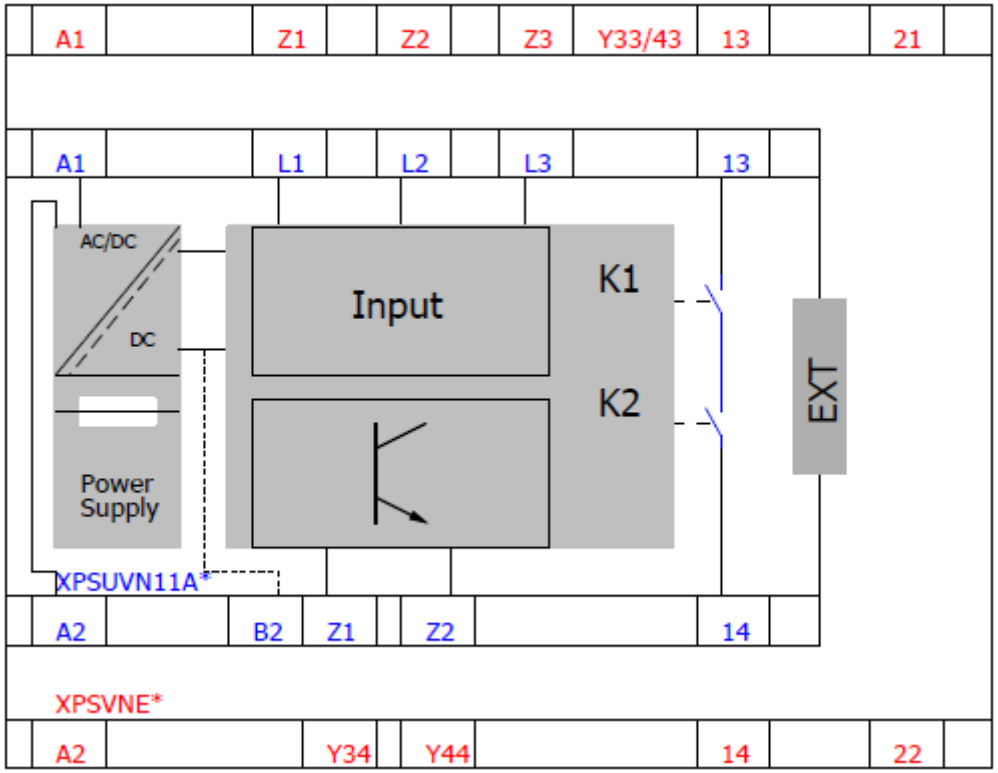

XPSUVN

According to the number of contacts XPSVNE is replaced by XPSUVN+XPSUEP

XPSVNE

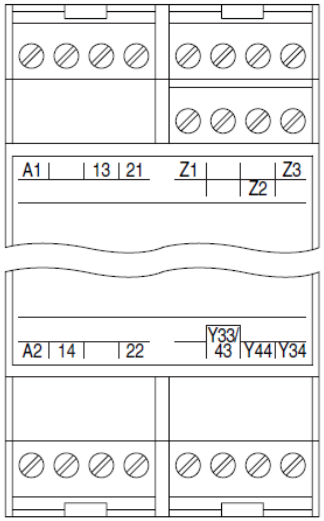

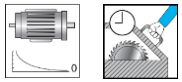

XPSUVN+XPSUEP

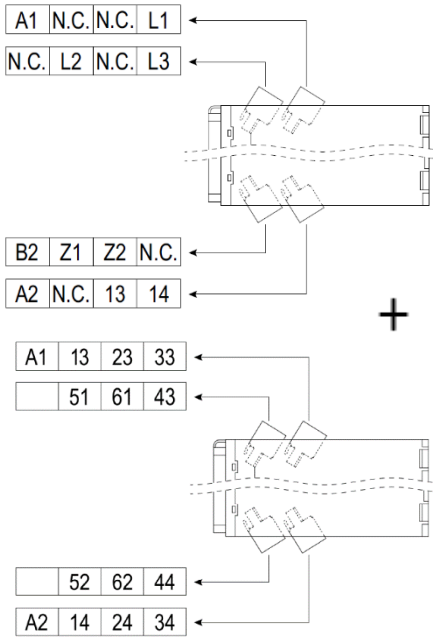

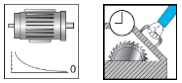

Commercial Reference	Commercial Reference
XPSVNE1142HSP	**XPSUVN11AP + XPSUEP14AP**
XPSVNE1142LFP	**XPSUVN11AP + XPSUEP14AP**
XPSVNE1142P	**XPSUVN11AP + XPSUEP14AP**
XPSVNE3442HSP	**XPSUVN31AP + XPSUEP34AP**

Commercial Reference	Commercial Reference
XPSVNE3442LFP	**XPSUVN31AP + XPSUEP34AP**
XPSVNE3442P	**XPSUVN31AP + XPSUEP34AP**
XPSVNE3742HSP	**XPSUVN31AP + XPSUEP34AP**
XPSVNE3742P	**XPSUVN31AP + XPSUEP34AP**

According to the number of contacts XPSVNE is replaced by XPSUVN+XPSUEP

XPSVNE

XPSUVN+XPSUEP

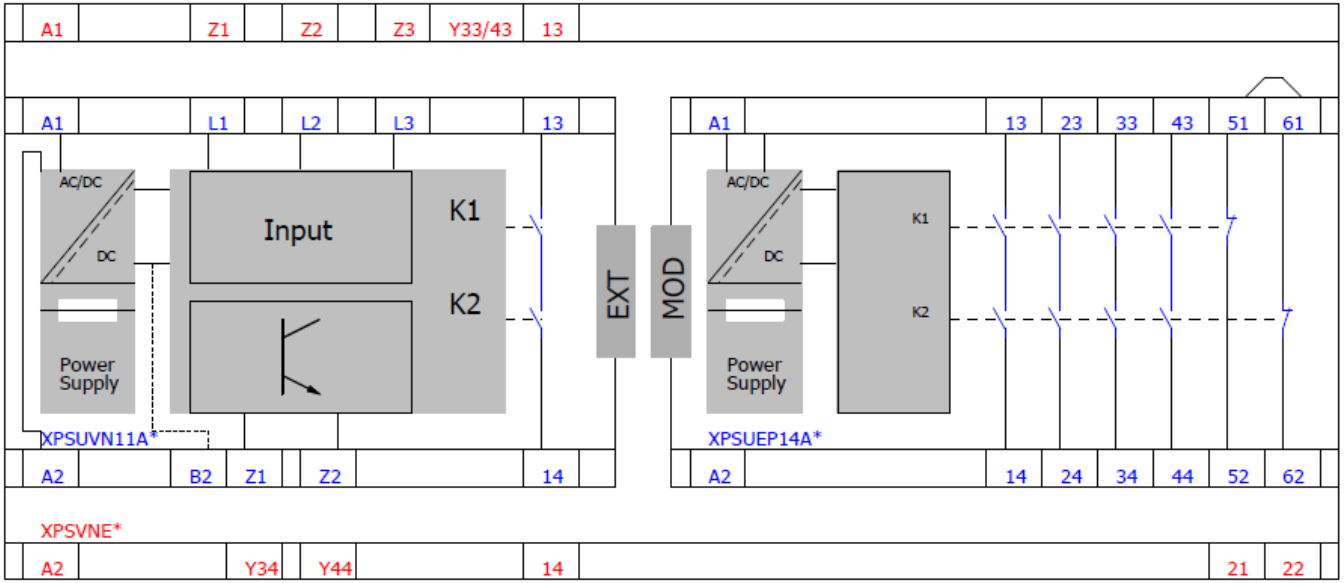

Wiring Standstill monitoring diagram XPSVNE & XPSUVN

XPSVNE

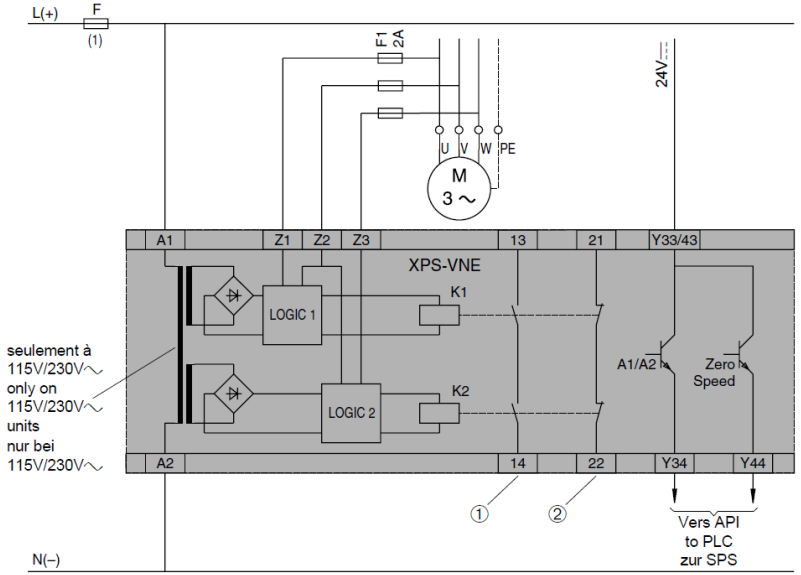

Moteur à courant triphasé – Raccordement avec 3 conducteurs
Three-phase motor - connection with 3 leads
Drehstrommotor – Anschluß mit 3 Leitungen

① Libération en cas d'arrêt
Unlocking at zerospeed
Freigabe bei Stillstand

② Moteur en marche
Motor is running
Motor läuft

XPSUVN

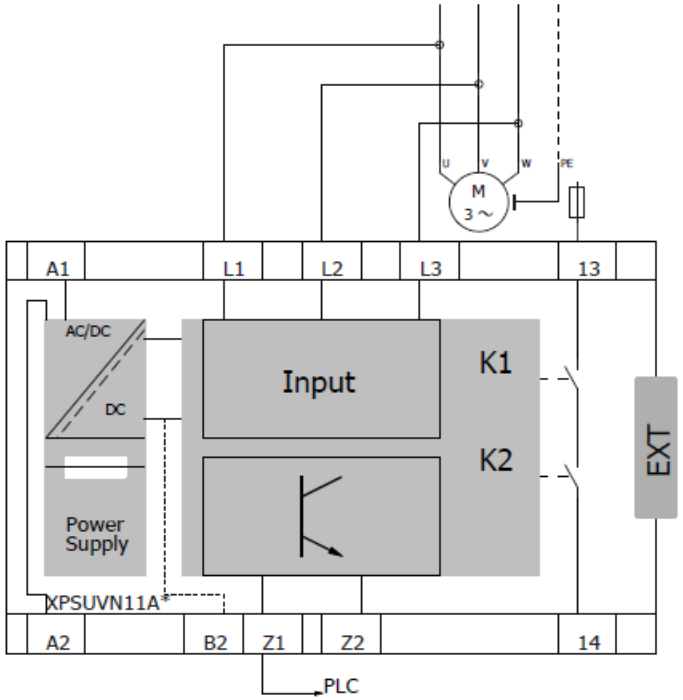

Z1- Pulsed output for diagnostics, not safety-related
Z2- Solid state output, not safety-related
B2- Terminal for common reference potential for 24Vdc signals. The power supplies of the connected equipment must have a common reference potential to be connected to this terminal.
EXT- Side connector for output extension module XPSUEP
Note:

1. The safety module operates with automatic start/restart
2. Connect the semiconductor pulsed output Z1 to a suitable input of the logic controller if you want to use the diagnostics pattern the output provides
3. The semiconductor binary status output Z2 is activated when the safety-related outputs are activated.
4. With appropriated input and output devices, XPSUVN can reach up to PLe, SILCL3

Wiring Standstill monitoring diagram XPSVNE & XPSUVN – Additional information

XPSUVN

Voltage measurement:

The safety module allows for sensorless standstill monitoring of a motor by measuring the residual voltage that is generated by remanent magnetization after power to the motor is removed and the motor coasts down or has reached standstill. An adjustable voltage threshold is used to determine whether the motor is considered to be at a standstill:

- Residual voltage above voltage threshold: Motor is considered not to be at a standstill
- Residual voltage below voltage threshold: Motor is considered to be at a standstill if the adjustable activation delay has fully elapsed

The safety module does not directly measure velocity or standstill like, for example, an encoder does. The safety module determines standstill as a condition derived from the measured residual voltage. The amount of residual voltage decreases proportionally to the speed of the motor. A variety of factors can affect the measurement of the residual voltage and, as a result, the conditions under page 26 of your user guide which the safety module transitions from and to the defined safe state.

Wire interruption

- The safety module monitors the circuitry for the voltage between L1 and L2 (voltage U12) as well as between L3 and L2 (voltage U32) for wire interruption (also referred to as broken wire detection).
- If one or more of the wires connected to L1 and/or L2 and/or L3 are interrupted, the safety module detects a broken wire condition.

Safety-Related Analog Input

- Rated insulation voltage phase-to-phase (isolation) as per IEC 60947-5-1: 690 V
- Frequency range of residual voltage for detection of motor standstill: 0… 1 kHz
- Adjustable voltage thresholds for detection of motor standstill (values are peak-to-peak for AC voltage): 50mV, 65mV, 85mV, 110mV, 140mV, 180mV, 230mV, 300mV, 400mV, 500mV

Delay Times for Activation Delay for Safety-Related outputs (Delay Selector)

- Configurable values: 0.5s, 1s, 2s, 3s, 5s, 8s, 12s, 20s, 35s, 60s
- In addition to the measurement of the residual voltage, the safety module uses an adjustable activation delay. The activation delay is the period between the point in time at which the measured voltage drops below the adjusted voltage threshold and the point in time at which activation of the safety-related outputs is triggered. The activation delay must fully elapse before the safety-related outputs are activated. If the measured voltage increases above the adjusted voltage threshold while the activation delay is running, the activation delay is reset to zero and the safety-related output remains deactivated

Common reference potential

- Terminal B2 is provided to obtain a common reference potential for 24 Vdc signals.
- The power supplies of the connected equipment must have a common reference potential.
- In the case of XPSUVN31A•, terminal B2 must be grounded. In the case of XPSUVN11A•, the safety module is already grounded via the PELV power supply unit connected to terminals A1 and A2.

Safety-related outputs

- The wiring of the safety-related output depends on the safety-related function to be implemented.
- Install fuses with the rating specified in the chapter Electrical Characteristics, page 18 of your user guide.

Wiring Standstill monitoring diagram XPSVNE & XPSUVN

XPSVNE

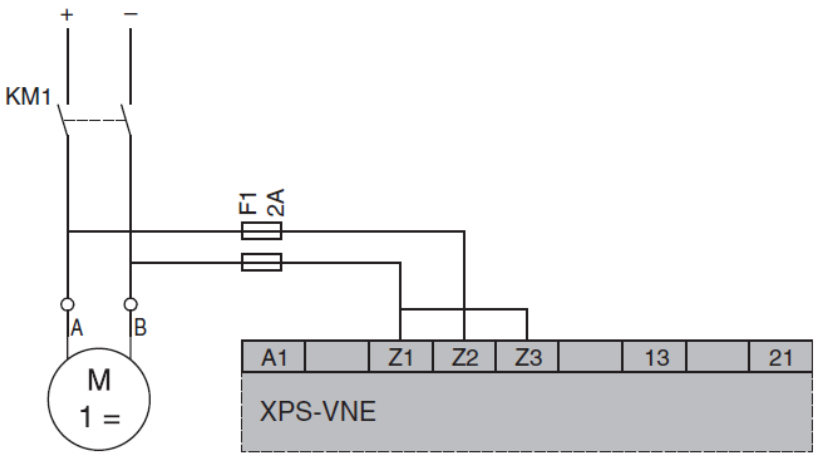

Moteur à courant continu
Direct current motor
Gleichstrommotor

XPSUVN

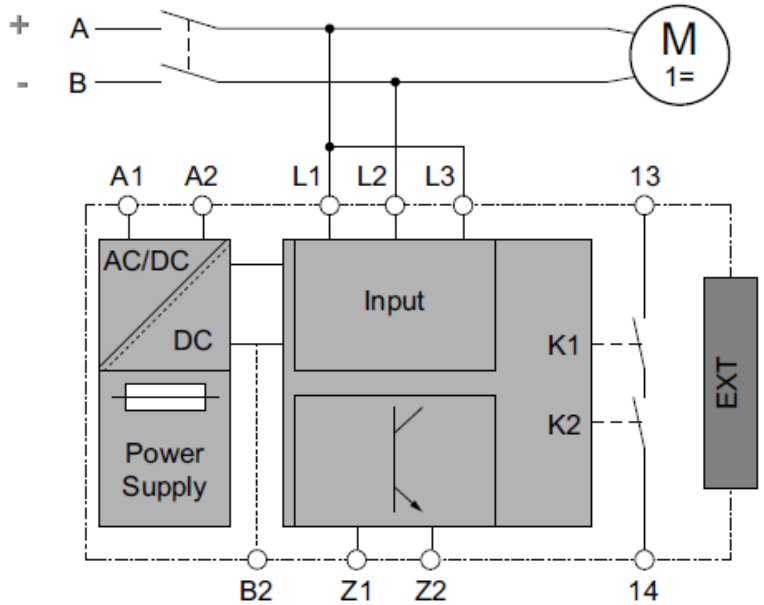

Z1- Pulsed output for diagnostics, not safety-related
Z2- Solid state output, not safety-related
B2- Terminal for common reference potential for 24Vdc signals. The power supplies of the connected equipment must have a common reference potential to be connected to this terminal.
EXT- Side connector for output extension module XPSUEP
Note:

1. The safety module operates with automatic start/restart
2. Connect the semiconductor pulsed output Z1 to a suitable input of the logic controller if you want to use the diagnostics pattern the output provides
3. The semiconductor binary status output Z2 is activated when the safety-related outputs are activated.
4. With appropriated input and output devices, XPSUVN can reach up to PLe, SILCL3

Wiring Standstill monitoring diagram XPSVNE & XPSUVN

XPSVNE

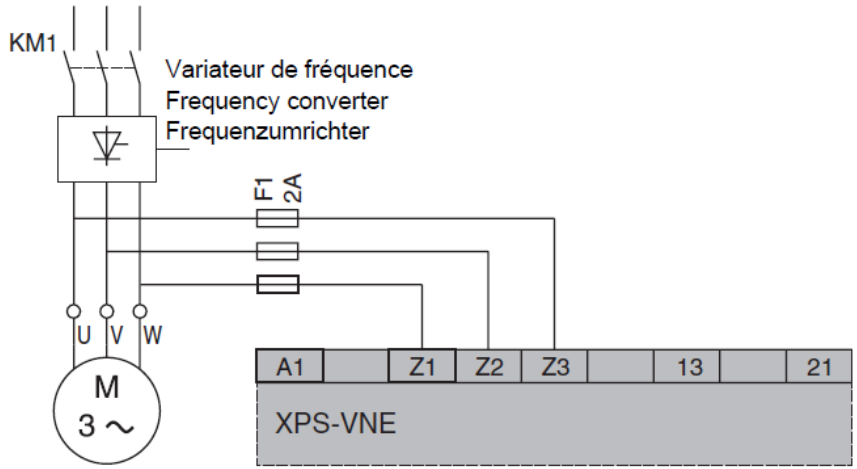

Moteur à courant triphasé avec variateur de fréquence – Raccordement avec 3 conducteurs
Three-phase motor with frequency converter – connection with 3 leads
Drehstrommotor mit Frequenzumrichter – Anschluß mit 3 Leitungen

XPSUVN

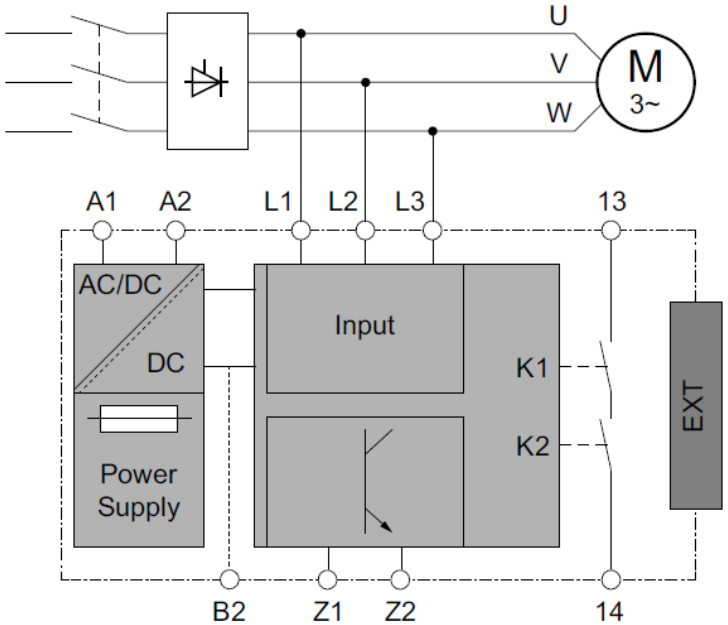

Z1- Pulsed output for diagnostics, not safety-related
Z2- Solid state output, not safety-related
B2- Terminal for common reference potential for 24Vdc signals. The power supplies of the connected equipment must have a common reference potential to be connected to this terminal.
EXT- Side connector for output extension module XPSUEP
Note:

1. The safety module operates with automatic start/restart
2. Connect the semiconductor pulsed output Z1 to a suitable input of the logic controller if you want to use the diagnostics pattern the output provides
3. The semiconductor binary status output Z2 is activated when the safety-related outputs are activated.
4. With appropriated input and output devices, XPSUVN can reach up to PLe, SILCL3

Wiring Standstill monitoring diagram XPSVNE & XPSUVN

XPSVNE

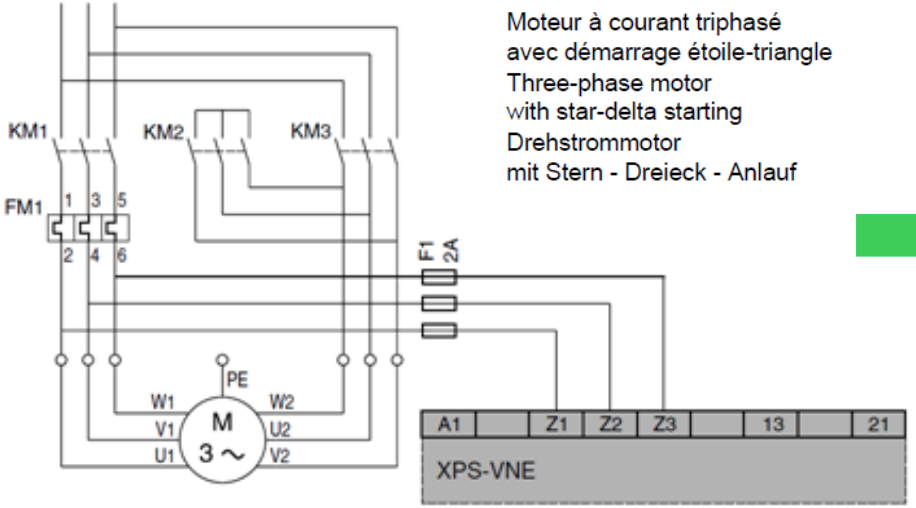

Moteur à courant triphasé
avec démarrage étoile-triangle
Three-phase motor
with star-delta starting
Drehstrommotor
mit Stern - Dreieck - Anlauf

Le contacteur en étoile doit être fermé après la mise hors tension du moteur afin de permettre la détection de vitesse nulle.
After having disconnected the motor, the star contactor must be activated to ensure the zero speed detection.
Das Stern-Schütz muß nach Abschaltung des Motors eingeschaltet werden, um die Erfassung des Stillstands zu ermöglichen.

XPSUVN

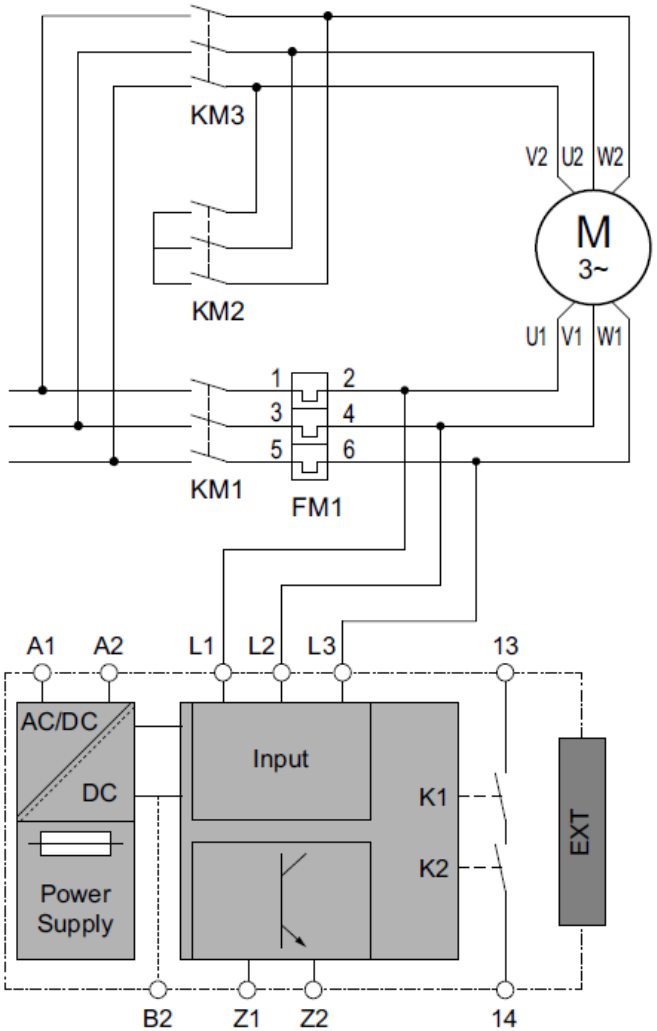

Wiring Standstill monitoring diagram XPSVNE & XPSUVN – Additional information

XPSUVN

Z1- Pulsed output for diagnostics, not safety-related
Z2- Solid state output, not safety-related
B2- Terminal for common reference potential for 24Vdc signals. The power supplies of the connected equipment must have a common reference potential to be connected to this terminal.
EXT- Side connector for output extension module XPSUEP

Note:

1. The safety module operates with automatic start/restart
2. After power has been removed from the motor, the star contactor (KM2) must be activated to allow for measurement of the residual voltage during coasting down.
3. Connect the semiconductor pulsed output Z1 to a suitable input of the logic controller if you want to use the diagnostics pattern the output provides
4. The semiconductor binary status output Z2 is activated when the safety-related outputs are activated.
5. With appropriated input and output devices, XPSUVN can reach up to PLe, SILCL3

⚠ CAUTION

The information provided in this documentation contains general descriptions and/or technical characteristics of the performance of the products contained herein. This documentation is not intended as a substitute for and is not to be used for determining suitability or reliability of these products for specific user applications. It is the duty of any such user or integrator to perform the appropriate and complete risk analysis, evaluation and testing of the products with respect to the relevant specific application or use thereof. Neither Schneider Electric nor any of its affiliates or subsidiaries shall be responsible or liable for misuse of the information contained herein. If you have any suggestions for improvements or amendments or have found errors in this publication, please notify us.

You agree not to reproduce, other than for your own personal, noncommercial use, all or part of this document on any medium whatsoever without permission of Schneider Electric, given in writing. You also agree not to establish any hypertext links to this document or its content. Schneider Electric does not grant any right or license for the personal and noncommercial use of the document or its content, except for a non-exclusive license to consult it on an "as is" basis, at your own risk. All other rights are reserved.

All pertinent state, regional, and local safety regulations must be observed when installing and using this product. For reasons of safety and to help ensure compliance with documented system data, only the manufacturer should perform repairs to components.

When devices are used for applications with technical safety requirements, the relevant instructions must be followed.

Failure to use Schneider Electric software or approved software with our hardware products may result in injury, harm, or improper operating results.

Failure to observe this information can result in injury or equipment damage.

© 2021 Schneider Electric. All rights reserved.