Data Sheet | Item Number: 2002-1611/1000-867

2-conductor fuse terminal block; with pivoting fuse holder; with end plate; for 5 x 20 mm miniature metric fuse; with blown fuse indication by LED; 120 V; for DIN-rail 35 x 15 and 35 x 7.5; 2.5 mm²; Push-in CAGE CLAMP®; 2,50 mm²; gray

https://www.wago.com/2002-1611/1000-867

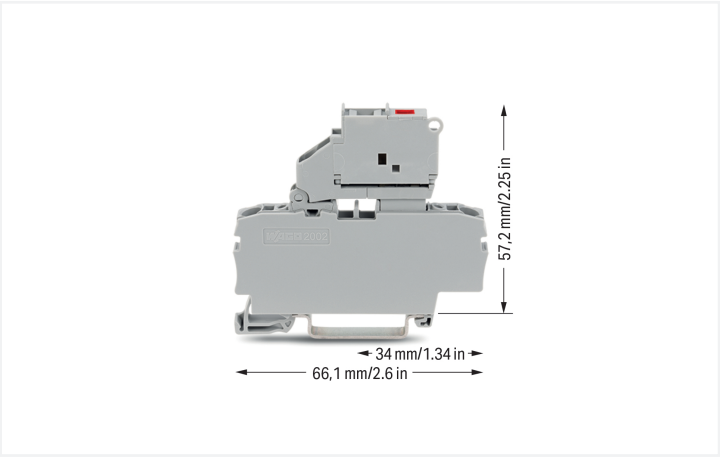

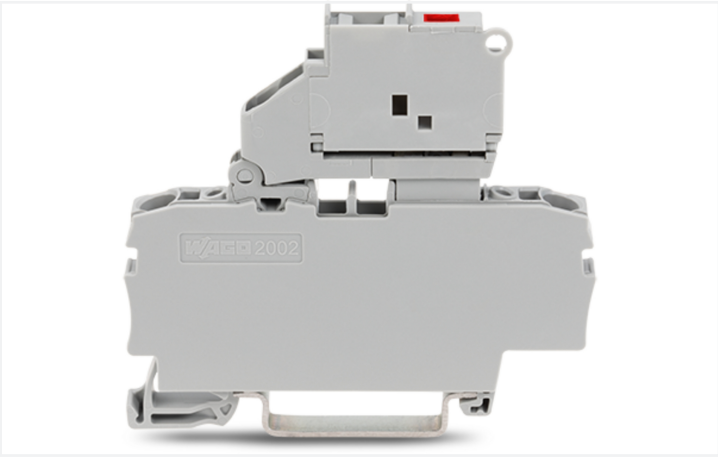

Color: gray

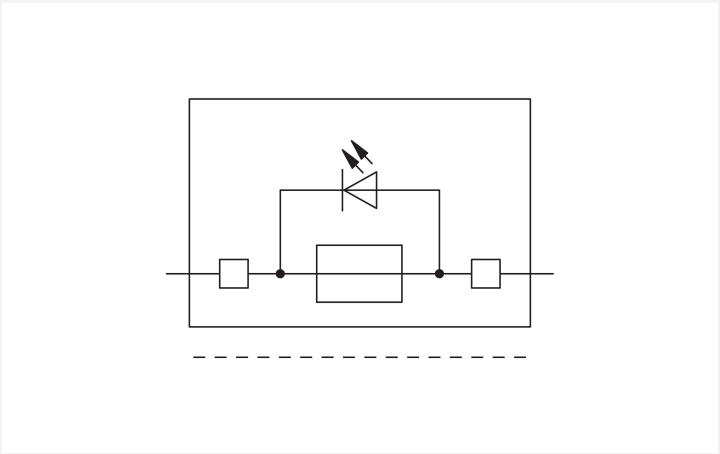

Fuse terminal block, 2002 Series, Push-in CAGE CLAMP®

This fuse terminal block (item number 2002-1611/1000-867) is designed to connect conductors quickly and easily. Strip lengths must be between 10 and 12 mm when connecting conductors to this fuse terminal block. Featuring conductor terminals along with Push-in CAGE CLAMP®, this connector is highly versatile. Push-in CAGE CLAMP® technology provides a universal connection solution for all conductor types. It allows both solid and fine-stranded conductors with ferrules to be inserted directly into the clamping point without the need for tools. Depending on the type of conductor, this fuse terminal block is suitable for conductor cross sections ranging from 0.25 mm² to 4 mm².

This product is designed for specific Ex applications (please refer to the product datasheet).

Notes

Safety Information	The 2 mm test slot is only approved for high impedance measurement up to max. 100 mA.

Electrical data

Ratings per	IEC/EN 60947-7-3		
Overvoltage category	III	III	II
Pollution degree	3	2	2
Nominal voltage	250 V	-	-
Rated impulse withstand voltage	6 kV	-	-
Rated current	6.3 A	-	-

Ratings per IEC/EN – Notes	
Ratings (note)	Electrical ratings are given by the fuse and blown fuse indication.
Rated current (note)	Leakage current in case of a blown fuse: LED 2 mA

Approvals per	UL 1059		
Use group	B	C	D
Rated voltage	120 V	120 V	120 V
Rated current	10 A	10 A	10 A

Approvals per	CSA 22.2 No 158		
Use group	B	C	D
Rated voltage	-	120 V	-
Rated current	-	6.3 A	-

Ex information

Reference to hazardous areas	See “Downloads – Documentation – Additional Information: Technical Section; Technical Explications”
Ratings per	ATEX: KIWA 17 ATEX 0030 U / IECEx: KIWA 17.0014U (Ex ec IIC Gc)
Rated voltage EN (Ex e II)	120 V
Rated current (Ex e II)	6.3 A

Power Loss

Power loss $P_{loss\,(max.)}$ (note)	When selecting glass cartridge fuses, make sure that the maximum power loss listed below is not exceeded. The power loss is determined according to IEC or EN 60947-7-3/VDE 0611-6 at 23°C. The temperature rise of the terminal block must be checked according to their application and mounting. Higher ambient temperatures represent an additional impact on miniature fuses. Therefore, in such applications, the rated current must be reduced if necessary. More details are available from the manufacturers.
Maximum power loss P_{loss} of fuse insert for overload and short-circuit protection (individual arrangement)	1.6 W
Maximum power loss P_{loss} of fuse insert for overload and short-circuit protection (block arrangement)	1.6 W
Maximum power loss P_{loss} of fuse insert for short-circuit protection (individual arrangement)	2.5 W
Power loss P_{loss} (max.) of fuse cartridge for short-circuit protection (block arrangement)	2.5 W

General information

Fuse receptacle	pivoting
Fuse type	Cylindrical fuse; 5 x 20 mm
Number/type of diode/LED	Red LED
Wiring direction	Front-entry wiring

Connection Data

Clamping units	2
Total number of potentials	1
Number of levels	1
Number of jumper slots	2

Connection 1

Connection technology	Push-in CAGE CLAMP®
Actuation type	Operating tool
Connectable conductor materials	Copper
Nominal cross-section	2.5 mm²
Solid conductor	0.25 … 4 mm² / 22 … 12 AWG
Solid conductor; push-in termination	0.75 … 4 mm² / 18 … 12 AWG

Continued on next page

Connection 1

Fine-stranded conductor	0.25 … 4 mm² / 22 … 12 AWG
Fine-stranded conductor; with insulated ferrule	0.25 … 2.5 mm² / 22 … 14 AWG
Fine-stranded conductor; with ferrule; push-in termination	1 … 2.5 mm² / 18 … 14 AWG
Note (conductor cross-section)	Depending on the conductor characteristic, a conductor with a smaller cross-section can also be inserted via push-in termination.
Strip length	10 … 12 mm / 0.39 … 0.47 inches
Wiring direction	Front-entry wiring

Physical data

Width	6.2 mm / 0.244 inches
Height	66.1 mm / 2.602 inches
Depth from upper-edge of DIN-rail	57.2 mm / 2.252 inches

Mechanical data

Mounting type	DIN-35 rail
Marking level	Center/side marking

Material data

Note (material data)	Information on material specifications can be found here
Color	gray
Material group	I
Insulation material (main housing)	Polyamide (PA66)
Flammability class per UL94	V0
Fire load	0.253 MJ
Weight	13.6 g

Environmental requirements

Processing temperature	-35 … +85 °C
Continuous operating temperature	-60 … +105 °C

Environmental Testing

Test specification: Railway applications – Rolling stock – Electronic equipment	DIN EN 50155 (VDE 0115-200):2022-06
Test procedure: Railway applications – Rolling stock equipment – Vibration and shock tests	DIN EN 61373 (VDE 0115-0106):2011-04
Spectrum/Mounting location	Service life test, Category 1, Class A/B
Functional test with noise-like oscillations	Test passed according to Section 8 of the standard
Frequency	f_1 = 5 Hz to f_2 = 150 Hz
Acceleration	0.101g (highest test level used for all axes)
Test duration per axis	10 min.
Test directions	X, Y and Z axes
Monitoring of contact faults and interruptions	Passed
Voltage drop measurement before and after each axis	Passed
Simulated service life test through increased levels of noise-like oscillations	Test passed according to Section 9 of the standard
Frequency	f_1 = 5 Hz to f_2 = 150 Hz
Acceleration	0.572g (highest test level used for all axes)

Continued on next page

Environmental Testing

Test duration per axis	5 h
Test directions	X, Y and Z axes
Extended testing: Monitoring of contact faults and interruptions	Passed
Extended testing: Voltage drop measurement before and after each axis	Passed
Shock test	Test passed according to Section 10 of the standard
Shock pulse form	Half sine
Acceleration	5g (highest test level used for all axes)
Shock duration	30 ms
Number of shocks (per axis)	3 pos. und 3 neg.
Test directions	X, Y and Z axes
Extended testing: Monitoring of contact faults and interruptions	Passed
Extended testing: Voltage drop measurement before and after each axis	Passed
Vibration and shock stress for rolling stock equipment	Passed

Commercial data

Product Group	22 (TOPJOB S)
PU (SPU)	50 pcs
Packaging type	Box
Country of origin	DE
GTIN	4055143870474
Customs tariff number	85369095000

Product Classification

UNSPSC	39121410
eCl@ss 10.0	27-14-11-16
eCl@ss 9.0	27-14-11-16
ETIM 9.0	EC000899
ETIM 10.0	EC000899
ECCN	NO US CLASSIFICATION

Environmental Product Compliance

RoHS Compliance Status	Compliant,No Exemption
SCIP notification number (Austria)	b0ce05e0-ab65-41e7-9a8c-54eb5aab4f35
SCIP notification number (Belgium)	c3a0d51a-5d7c-4f8f-ad60-05a0fc160b80
SCIP notification number (Bulgaria)	f0e6e9c4-81fc-4812-a10d-dd67c67e634a
SCIP notification number (Czech Republic)	d663e358-eeec-446c-a483-53007195ae6e
SCIP notification number (Denmark)	30e76cb0-7094-44d7-82f8-252144256b2e
SCIP notification number (Finland)	2a8f3086-a103-4f26-91e0-e375db6072a5
SCIP notification number (France)	835589d7-7b4f-4216-9ea8-58c8284c485b
SCIP notification number (Germany)	25ed7d51-1701-4da9-a912-8603efd8914a
SCIP notification number (Hungary)	e986fd4b-08f2-456d-a20b-5c5405dfee4d
SCIP notification number (Italy)	52d0daff-b67b-4760-86d2-eebdc13618ed
SCIP notification number (Netherlands)	6b6d99d2-cde1-43a2-8ab7-1d3a6643ac02
SCIP notification number (Poland)	440e57bc-4084-4fa2-879b-6252131e1ed9
SCIP notification number (Romania)	c96dc9ce-f257-41b7-95ac-9a81877644ea
SCIP notification number (Sweden)	36f8988b-2c18-4972-b5c0-eb92fa1282cd

Continued on next page

Approvals / Certificates

General approvals

Approval	Standard	Certificate Name
CCA DEKRA Certification B.V.	EN 60947	NTR NL-8054
DEKRA DEKRA Certification B.V.	EN 60947	71-149763
KEMA/KEUR DEKRA Certification B.V.	EN 60947	71-124163
UL Underwriters Laboratories Inc.	UL 1059	E45172

Declarations of conformity and manufacturer's declarations

Approval	Standard	Certificate Name
ATEX-Attestation of Conformity WAGO GmbH & Co. KG	-	-
EU-Declaration of Conformity WAGO GmbH & Co. KG	-	-
Railway WAGO GmbH & Co. KG	-	Railway Ready
UK-Declaration of Conformity WAGO GmbH & Co. KG	-	-

Approvals for marine applications

Approval	Standard	Certificate Name
ABS American Bureau of Shipping	EN 60947	24-0152298-PDA
DNV GL Det Norske Veritas, Germanischer Lloyd	-	TAE00001V2
PRS Polski Rejestr Statków	-	TE/1094/880590/23

Approvals for hazardous areas

Approval	Standard	Certificate Name
ATEX KIWA Netherlands B.V.	EN 60079	KIWA 17ATEX0030 U
IECEx KIWA Netherlands B.V.	EN 60079	IECEx KIWA 17.0014U (Ex ec IIC Gc)

Downloads

Environmental Product Compliance

Compliance Search

Environmental Product Compliance
2002-1611/1000-867

Documentation

Bid Text

2002-1611/1000-867	29.04.2019	xml 4.28 KB
2002-1611/1000-867	23.04.2019	docx 15.57 KB

Continued on next page

CAD/CAE-Data

CAD data

2D/3D Models
2002-1611/1000-867

CAE data

EPLAN Data Portal
2002-1611/1000-867

WSCAD Universe
2002-1611/1000-867

ZUKEN Portal
2002-1611/1000-867

1 Compatible Products

1.1 Required Accessories

1.1.1 End plate

1.1.1.1 End plate



Item No.: 2002-991
End plate for fuse terminal blocks; 2 mm thick; gray



Item No.: 2002-992
End plate for fuse terminal blocks; 2 mm thick; orange



Item No.: 209-191
Separator for Ex e/Ex i applications; 3 mm thick; 120 mm wide; orange

1.2 Optional Accessories

1.2.1 DIN-rail

1.2.1.1 Mounting accessories



Item No.: 210-196
Aluminum carrier rail; 35 x 8.2 mm; 1.6 mm thick; 2 m long; unslotted; similar to EN 60715; silver-colored



Item No.: 210-198
Copper carrier rail; 35 x 15 mm; 2.3 mm thick; 2 m long; unslotted; according to EN 60715; copper-colored



Item No.: 210-508
Steel carrier rail; 35 x 15 mm; 1.5 mm thick; 2 m long; slotted; galvanized; similar to EN 60715; silver-colored



Item No.: 210-197
Steel carrier rail; 35 x 15 mm; 1.5 mm thick; 2 m long; slotted; similar to EN 60715; silver-colored



Item No.: 210-506
Steel carrier rail; 35 x 15 mm; 1.5 mm thick; 2 m long; unslotted; galvanized; similar to EN 60715; silver-colored



Item No.: 210-114
Steel carrier rail; 35 x 15 mm; 1.5 mm thick; 2 m long; unslotted; similar to EN 60715; silver-colored



Item No.: 210-118
Steel carrier rail; 35 x 15 mm; 2.3 mm thick; 2 m long; unslotted; according to EN 60715; silver-colored



Item No.: 210-115
Steel carrier rail; 35 x 7.5 mm; 1 mm thick; 2 m long; slotted; according to EN 60715; "Hole width 18 mm; silver-colored



Item No.: 210-112
Steel carrier rail; 35 x 7.5 mm; 1 mm thick; 2 m long; slotted; according to EN 60715; "Hole width 25 mm; silver-colored



Item No.: 210-504
Steel carrier rail; 35 x 7.5 mm; 1 mm thick; 2 m long; slotted; galvanized; according to EN 60715; silver-colored



Item No.: 210-113
Steel carrier rail; 35 x 7.5 mm; 1 mm thick; 2 m long; unslotted; according to EN 60715; silver-colored



Item No.: 210-505
Steel carrier rail; 35 x 7.5 mm; 1 mm thick; 2 m long; unslotted; galvanized; according to EN 60715; silver-colored

Continued on next page

1.2.2 Ferrule

1.2.2.1 Ferrule

Item No.: 216-241
Ferrule; Sleeve for 0.5 mm² / 20 AWG; insulated; electro-tin plated; electrolytic copper; gastight crimped; acc. to DIN 46228, Part 4/09.90; white

Item No.: 216-242
Ferrule; Sleeve for 0.75 mm² / 18 AWG; insulated; electro-tin plated; electrolytic copper; gastight crimped; acc. to DIN 46228, Part 4/09.90; gray

Item No.: 216-262
Ferrule; Sleeve for 0.75 mm² / 18 AWG; insulated; electro-tin plated; electrolytic copper; gastight crimped; acc. to DIN 46228, Part 4/09.90; gray

Item No.: 216-243
Ferrule; Sleeve for 1 mm² / AWG 18; insulated; electro-tin plated; electrolytic copper; gastight crimped; acc. to DIN 46228, Part 4/09.90; red

Item No.: 216-263
Ferrule; Sleeve for 1 mm² / AWG 18; insulated; electro-tin plated; electrolytic copper; gastight crimped; acc. to DIN 46228, Part 4/09.90; red



Item No.: 216-244
Ferrule; Sleeve for 1.5 mm² / AWG 16; insulated; electro-tin plated; electrolytic copper; gastight crimped; acc. to DIN 46228, Part 4/09.90; black



Item No.: 216-264
Ferrule; Sleeve for 1.5 mm² / AWG 16; insulated; electro-tin plated; electrolytic copper; gastight crimped; acc. to DIN 46228, Part 4/09.90; black



Item No.: 216-246
Ferrule; Sleeve for 2.5 mm² / AWG 14; insulated; electro-tin plated; electrolytic copper; gastight crimped; acc. to DIN 46228, Part 4/09.90; blue



Item No.: 216-266
Ferrule; Sleeve for 2.5 mm² / AWG 14; insulated; electro-tin plated; electrolytic copper; gastight crimped; acc. to DIN 46228, Part 4/09.90; blue

1.2.3 Installation

1.2.3.1 Cover

Item No.: 709-156
Cover; Type 3; suitable for cover carrier, type 3; 1 m long; transparent

1.2.3.2 Cover carrier



Item No.: 709-169
Cover carrier; Type 3; incl. fixing/retaining screws and knurled nut; suitable for 279 to 282 and 880 Series rail-mounted terminal blocks; suitable for 264 Series miniature rail-mounted terminal blocks; suitable for 270 Series sensor and actuator terminal blocks; gray

1.2.4 Insulation stop

1.2.4.1 Insulation stop



Item No.: 2002-171
Insulation stop; 0.25 - 0.5 mm²; 5 pieces/strip; light gray



Item No.: 2002-172
Insulation stop; 0.75 - 1 mm²; 5 pieces/strip; dark gray

Continued on next page

1.2.5 Jumper

1.2.5.1 Jumper



Item No.: 2004-406/020-000
Delta jumper; insulated; light gray



Item No.: 2004-410
Jumper; 10-way; insulated; light gray

Item No.: 2004-402
Jumper; 2-way; insulated; light gray



Item No.: 2004-403
Jumper; 3-way; insulated; light gray



Item No.: 2004-404
Jumper; 4-way; insulated; light gray



Item No.: 2004-405
Jumper; 5-way; insulated; light gray



Item No.: 2004-406
Jumper; 6-way; insulated; light gray



Item No.: 2004-407
Jumper; 7-way; insulated; light gray



Item No.: 2004-408
Jumper; 8-way; insulated; light gray



Item No.: 2004-409
Jumper; 9-way; insulated; light gray

Item No.: 2004-440
Jumper; from 1 to 10; insulated; light gray

Item No.: 2004-433
Jumper; from 1 to 3; insulated; light gray

Item No.: 2004-434
Jumper; from 1 to 4; insulated; light gray

Item No.: 2004-435
Jumper; from 1 to 5; insulated; light gray

Item No.: 2004-436
Jumper; from 1 to 6; insulated; light gray

Item No.: 2004-437
Jumper; from 1 to 7; insulated; light gray

Item No.: 2004-438
Jumper; from 1 to 8; insulated; light gray

Item No.: 2004-439
Jumper; from 1 to 9; insulated; light gray



Item No.: 2004-405/011-000
Star point jumper; 3-way; insulated; light gray



Item No.: 210-103
Wire commoning chain; 0.5 mm²; insulated; black



Item No.: 210-123
Wire commoning chain; insulated; blue

1.2.6 Locking system

1.2.6.1 Locking system



Item No.: 210-254
Interlocking link; mechanically locks multiple links; 1 m long; transparent

1.2.7 Marking

1.2.7.1 Marker



Item No.: 2009-145/000-006
Mini-WSB Inline; for Smart Printer; 1700 pieces on roll; stretchable 5 - 5.2 mm; plain; snap-on type; blue



Item No.: 2009-145/000-007
Mini-WSB Inline; for Smart Printer; 1700 pieces on roll; stretchable 5 - 5.2 mm; plain; snap-on type; gray



Item No.: 2009-145/000-023
Mini-WSB Inline; for Smart Printer; 1700 pieces on roll; stretchable 5 - 5.2 mm; plain; snap-on type; green



Item No.: 2009-145/000-012
Mini-WSB Inline; for Smart Printer; 1700 pieces on roll; stretchable 5 - 5.2 mm; plain; snap-on type; orange



Item No.: 2009-145/000-005
Mini-WSB Inline; for Smart Printer; 1700 pieces on roll; stretchable 5 - 5.2 mm; plain; snap-on type; red



Item No.: 2009-145/000-024
Mini-WSB Inline; for Smart Printer; 1700 pieces on roll; stretchable 5 - 5.2 mm; plain; snap-on type; violet



Item No.: 2009-145
Mini-WSB Inline; for Smart Printer; 1700 pieces on roll; stretchable 5 - 5.2 mm; plain; snap-on type; white



Item No.: 2009-145/000-002
Mini-WSB Inline; for Smart Printer; 1700 pieces on roll; stretchable 5 - 5.2 mm; plain; snap-on type; yellow



Item No.: 248-501/000-006
Mini-WSB marking card; as card; not stretchable; plain; snap-on type; blue



Item No.: 248-501/000-007
Mini-WSB marking card; as card; not stretchable; plain; snap-on type; gray



Item No.: 248-501/000-023
Mini-WSB marking card; as card; not stretchable; plain; snap-on type; green



Item No.: 248-501/000-017
Mini-WSB marking card; as card; not stretchable; plain; snap-on type; light green

Continued on next page

1.2.7.1 Marker



Item No.: 248-501/000-012
Mini-WSB marking card; as card; not stretchable; plain; snap-on type; orange



Item No.: 248-501/000-005
Mini-WSB marking card; as card; not stretchable; plain; snap-on type; red



Item No.: 248-501/000-024
Mini-WSB marking card; as card; not stretchable; plain; snap-on type; violet



Item No.: 248-501
Mini-WSB marking card; as card; not stretchable; plain; snap-on type; white



Item No.: 248-501/000-002
Mini-WSB marking card; as card; not stretchable; plain; snap-on type; yellow



Item No.: 793-5501/000-006
WMB marking card; as card; for terminal block width 5 - 17.5 mm; stretchable 5 - 5.2 mm; plain; snap-on type; blue



Item No.: 793-5501/000-014
WMB marking card; as card; for terminal block width 5 - 17.5 mm; stretchable 5 - 5.2 mm; plain; snap-on type; brown



Item No.: 793-5501/000-007
WMB marking card; as card; for terminal block width 5 - 17.5 mm; stretchable 5 - 5.2 mm; plain; snap-on type; gray



Item No.: 793-5501/000-023
WMB marking card; as card; for terminal block width 5 - 17.5 mm; stretchable 5 - 5.2 mm; plain; snap-on type; green



Item No.: 793-5501/000-017
WMB marking card; as card; for terminal block width 5 - 17.5 mm; stretchable 5 - 5.2 mm; plain; snap-on type; light green



Item No.: 793-5501/000-012
WMB marking card; as card; for terminal block width 5 - 17.5 mm; stretchable 5 - 5.2 mm; plain; snap-on type; orange



Item No.: 793-5501/000-005
WMB marking card; as card; for terminal block width 5 - 17.5 mm; stretchable 5 - 5.2 mm; plain; snap-on type; red



Item No.: 793-5501/000-024
WMB marking card; as card; for terminal block width 5 - 17.5 mm; stretchable 5 - 5.2 mm; plain; snap-on type; violet

Item No.: 793-5501
WMB marking card; as card; for terminal block width 5 - 17.5 mm; stretchable 5 - 5.2 mm; plain; snap-on type; white



Item No.: 793-5501/000-002
WMB marking card; as card; for terminal block width 5 - 17.5 mm; stretchable 5 - 5.2 mm; plain; snap-on type; yellow



Item No.: 2009-115/000-006
WMB-Inline; for Smart Printer; 1500 pieces on roll; stretchable 5 - 5.2 mm; plain; snap-on type; blue



Item No.: 2009-115/000-007
WMB-Inline; for Smart Printer; 1500 pieces on roll; stretchable 5 - 5.2 mm; plain; snap-on type; gray



Item No.: 2009-115/000-023
WMB-Inline; for Smart Printer; 1500 pieces on roll; stretchable 5 - 5.2 mm; plain; snap-on type; green



Item No.: 2009-115/000-017
WMB-Inline; for Smart Printer; 1500 pieces on roll; stretchable 5 - 5.2 mm; plain; snap-on type; light green



Item No.: 2009-115/000-012
WMB-Inline; for Smart Printer; 1500 pieces on roll; stretchable 5 - 5.2 mm; plain; snap-on type; orange



Item No.: 2009-115/000-005
WMB-Inline; for Smart Printer; 1500 pieces on roll; stretchable 5 - 5.2 mm; plain; snap-on type; red



Item No.: 2009-115/000-024
WMB-Inline; for Smart Printer; 1500 pieces on roll; stretchable 5 - 5.2 mm; plain; snap-on type; violet



Item No.: 2009-115
WMB-Inline; for Smart Printer; 1500 pieces on roll; stretchable 5 - 5.2 mm; plain; snap-on type; white



Item No.: 2009-115/000-002
WMB-Inline; for Smart Printer; 1500 pieces on roll; stretchable 5 - 5.2 mm; plain; snap-on type; yellow

1.2.7.2 Marking strip



Item No.: 2009-110
Marking strips; for Smart Printer; on reel; not stretchable; plain; snap-on type; white

1.2.8 Protective warning marker

1.2.8.1 Cover



Item No.: 2002-115
Protective warning marker; for 5 terminal blocks; with high-voltage symbol, black; yellow

Continued on next page

1.2.9 Screwless end stop

1.2.9.1 Mounting accessories



Item No.: 249-117
Screwless end stop; 10 mm wide; for DIN-rail 35 x 15 and 35 x 7.5; gray



Item No.: 249-116
Screwless end stop; 6 mm wide; for DIN-rail 35 x 15 and 35 x 7.5; gray

1.2.10 Test and measurement

1.2.10.1 Testing accessories



Item No.: 210-136
Test plug; 2 mm Ø; with 500 mm cable; red

1.2.11 Tool

1.2.11.1 Operating tool



Item No.: 210-658
Operating tool; Blade: 3.5 x 0.5 mm; with a partially insulated shaft; angled; short; multicoloured



Item No.: 210-720
Operating tool; Blade: 3.5 x 0.5 mm; with a partially insulated shaft; multicoloured

Installation Notes

Conductor termination

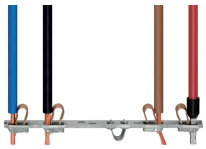

All conductor types at a glance

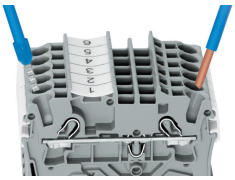

Push-in termination of solid and ferruled conductors

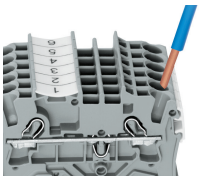

Inserting a conductor via push-in termination:
Solid conductors with cross-sections from either one size above, or up to two sizes below, the rated cross-section can be simply pushed in – no tools needed.

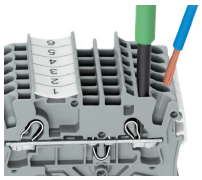

Inserting a conductor via operating tool:
Connecting fine-stranded conductors without ferrules, or small cross-sectional conductors that cannot be pushed in, is performed similarly to the original CAGE CLAMP® – just use an operating tool.
Advantage:
To open the clamp, the operating tool is inserted vertically. The conductor entry is less than 15 degrees for easier wiring.

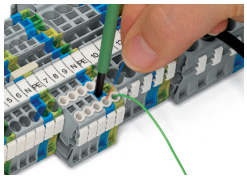

Conductor termination – insulation stop

Commoning

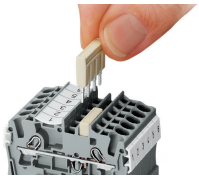

Insert push-in type jumper bar and push down until it hits backstop.

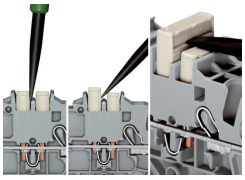

Removing a push-in type jumper bar:
Insert the operating tool between the jumper and partition wall of the dual jumper slots, then lift up the jumper.
Place the operating tool in the center of jumpers for up to five contacts (see above), or alternately on both sides for jumpers with more than five contacts.



Fuse terminal blocks with a width of 6.2 mm/0.244 in can be assembled adjacently. If there is no adjacent fuse terminal block at the end of the assembly, an end plate must be used.

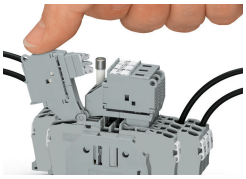

Fused Disconnect Terminal Block with a Pivoting Fuse Holder
Pivot the fuse holder into the locked open position.

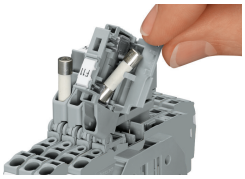

Fused disconnect terminal block with a pivoting fuse holder
Fuse replacement

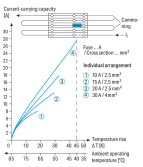

Application Notes on Terminal Blocks for Glass Cartridge Fuses
Diagram: “Individual Arrangement”

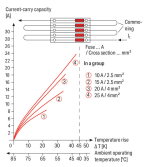

Application Notes on Terminal Blocks for Glass Cartridge Fuses
Diagram: “Block Arrangement”

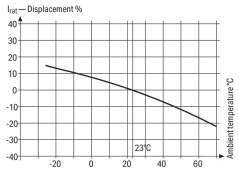

Application Notes on Terminal Blocks for Glass Cartridge Fuses
Nominal current ratings for fuse cartridges are defined differently in international standards. This is why the recommended continuous current-carrying capacity of the fuses is a max. 80% of their nominal current according to DIN 72581/Part 3 (for a surrounding air temperature of 23°C).
Selecting the correct fuse cartridge is important for product safety within applications, as well as for fuse cartridge service life and reliability. Fuse cartridges will only operate perfectly as protection components (break-off point) if they are properly selected and used as intended (i.e., according to the state of the technology and valid specifications, as well as data sheet characteristics), according to basic safety requirements (i.e., persons, animals and property must be protected against hazards).

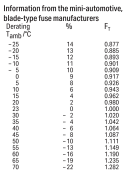

Concerning product safety, fuse cartridges must generally be tested under both normal and faulty operating conditions within your application.

Marking

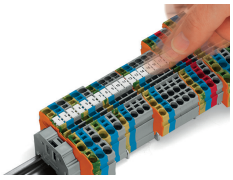

Snapping WMB Inline markers into marker slots.

