Data Sheet | Item Number: 2002-820

Empty component plug housing; 10.4 mm wide; 4-pole; Type 3; gray

https://www.wago.com/2002-820

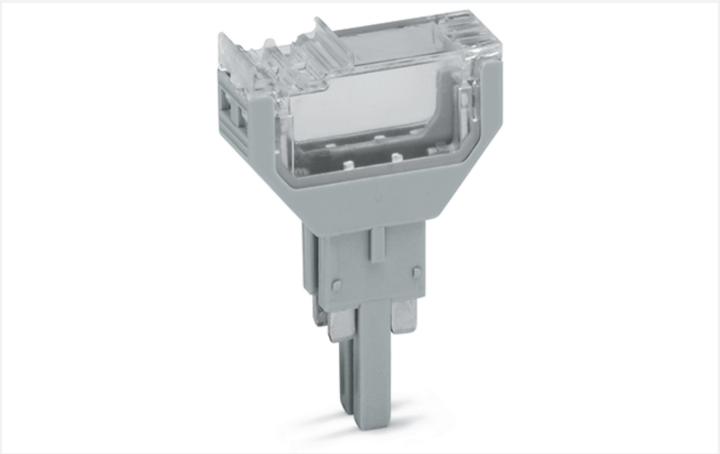

Color: gray

Empty component plug housing, 2002 Series, gray

Enjoy convenient electrical installations with this empty component plug housing (item number 2002-820). The item's dimensions are (10.4 x 29.6 x 41.8) mm (width x height x depth).

Physical data	
Width	10.4 mm / 0.409 inches
Height	29.6 mm / 1.165 inches
Depth	41.8 mm / 1.646 inches

Mechanical data	
Marking level	Center marking

Material data	
Note (material data)	Information on material specifications can be found here
Color	gray
Material group	I
Insulation material (main housing)	Polyamide (PA66)
Flammability class per UL94	V0
Fire load	0.104 MJ
Weight	5.3 g

Environmental requirements

Processing temperature	-35 … +85 °C
Continuous operating temperature	-60 … +105 °C

Commercial data

Product Group	22 (TOPJOB S)
PU (SPU)	50 pcs
Packaging type	Box
Country of origin	DE
GTIN	4045454857783
Customs tariff number	85366990990

Product Classification

UNSPSC	39121421
eCl@ss 10.0	27-14-11-49
eCl@ss 9.0	27-18-27-02
ETIM 9.0	EC002018
ETIM 10.0	EC002018
ECCN	NO US CLASSIFICATION

Environmental Product Compliance

RoHS Compliance Status	Compliant,No Exemption

Downloads

Environmental Product Compliance

Compliance Search

Environmental Product Compliance 2002-820

Documentation

Bid Text

2002-820	19.02.2019	xml 2.55 KB	
2002-820	29.04.2019	docx 14.28 KB	

Continued on next page

CAD/CAE-Data

CAD data	CAE data
2D/3D Models 2002-820	WSCAD Universe 2002-820
	ZUKEN Portal 2002-820

1 Compatible Products

1.1 Optional Accessories

1.1.1 Marking

1.1.1.1 Marker



Item No.: 793-5501/000-006
WMB marking card; as card; for terminal block width 5 - 17.5 mm; stretchable 5 - 5.2 mm; plain; snap-on type; blue



Item No.: 793-5501/000-014
WMB marking card; as card; for terminal block width 5 - 17.5 mm; stretchable 5 - 5.2 mm; plain; snap-on type; brown



Item No.: 793-5501/000-007
WMB marking card; as card; for terminal block width 5 - 17.5 mm; stretchable 5 - 5.2 mm; plain; snap-on type; gray



Item No.: 793-5501/000-023
WMB marking card; as card; for terminal block width 5 - 17.5 mm; stretchable 5 - 5.2 mm; plain; snap-on type; green



Item No.: 793-5501/000-017
WMB marking card; as card; for terminal block width 5 - 17.5 mm; stretchable 5 - 5.2 mm; plain; snap-on type; light green



Item No.: 793-5501/000-012
WMB marking card; as card; for terminal block width 5 - 17.5 mm; stretchable 5 - 5.2 mm; plain; snap-on type; orange



Item No.: 793-5501/000-005
WMB marking card; as card; for terminal block width 5 - 17.5 mm; stretchable 5 - 5.2 mm; plain; snap-on type; red



Item No.: 793-5501/000-024
WMB marking card; as card; for terminal block width 5 - 17.5 mm; stretchable 5 - 5.2 mm; plain; snap-on type; violet

Item No.: 793-5501
WMB marking card; as card; for terminal block width 5 - 17.5 mm; stretchable 5 - 5.2 mm; plain; snap-on type; white



Item No.: 793-5501/000-002
WMB marking card; as card; for terminal block width 5 - 17.5 mm; stretchable 5 - 5.2 mm; plain; snap-on type; yellow



Item No.: 2009-115/000-006
WMB-Inline; for Smart Printer; 1500 pieces on roll; stretchable 5 - 5.2 mm; plain; snap-on type; blue



Item No.: 2009-115/000-007
WMB-Inline; for Smart Printer; 1500 pieces on roll; stretchable 5 - 5.2 mm; plain; snap-on type; gray



Item No.: 2009-115/000-023
WMB-Inline; for Smart Printer; 1500 pieces on roll; stretchable 5 - 5.2 mm; plain; snap-on type; green



Item No.: 2009-115/000-017
WMB-Inline; for Smart Printer; 1500 pieces on roll; stretchable 5 - 5.2 mm; plain; snap-on type; light green



Item No.: 2009-115/000-012
WMB-Inline; for Smart Printer; 1500 pieces on roll; stretchable 5 - 5.2 mm; plain; snap-on type; orange



Item No.: 2009-115/000-024
WMB-Inline; for Smart Printer; 1500 pieces on roll; stretchable 5 - 5.2 mm; plain; snap-on type; violet



Item No.: 2009-115
WMB-Inline; for Smart Printer; 1500 pieces on roll; stretchable 5 - 5.2 mm; plain; snap-on type; white



Item No.: 2009-115/000-002
WMB-Inline; for Smart Printer; 1500 pieces on roll; stretchable 5 - 5.2 mm; plain; snap-on type; yellow

1.1.1.2 Marking strip



Item No.: 2009-110
Marking strips; for Smart Printer; on reel; not stretchable; plain; snap-on type; white

Continued on next page

1.1.2 Screwless end stop

1.1.2.1 Mounting accessories



Item No.: 249-117
Screwless end stop; 10 mm wide; for DIN-rail 35 x 15 and 35 x 7.5; gray



Item No.: 249-116
Screwless end stop; 6 mm wide; for DIN-rail 35 x 15 and 35 x 7.5; gray

1.1.3 Terminal blocks

1.1.3.1 Carrier terminal block for modules and plugs



Item No.: 2002-1661
2-conductor carrier terminal block; for DIN-rail 35 x 15 and 35 x 7.5; 2.5 mm²; Push-in CAGE CLAMP®; 2,50 mm²; gray



Item No.: 2002-1662
2-conductor carrier terminal block; for DIN-rail 35 x 15 and 35 x 7.5; 2.5 mm²; Push-in CAGE CLAMP®; 2,50 mm²; orange



Item No.: 2002-1961
2-conductor carrier terminal block; with additional jumper position; for DIN-rail 35 x 15 and 35 x 7.5; 2.5 mm²; Push-in CAGE CLAMP®; 2,50 mm²; gray



Item No.: 2202-1661
2-conductor carrier terminal block; with push-button; for DIN-rail 35 x 15 and 35 x 7.5; 2.5 mm²; Push-in CAGE CLAMP®; 2,50 mm²; gray



Item No.: 2202-1961
2-conductor carrier terminal block; with push-button; with additional jumper position; for DIN-rail 35 x 15 and 35 x 7.5; 2.5 mm²; Push-in CAGE CLAMP®; 2,50 mm²; gray



Item No.: 2002-1761
3-conductor carrier terminal block; for DIN-rail 35 x 15 and 35 x 7.5; 2.5 mm²; Push-in CAGE CLAMP®; 2,50 mm²; gray



Item No.: 2202-1761
3-conductor carrier terminal block; with push-button; for DIN-rail 35 x 15 and 35 x 7.5; 2.5 mm²; Push-in CAGE CLAMP®; 2,50 mm²; gray



Item No.: 2002-1861
4-conductor carrier terminal block; for DIN-rail 35 x 15 and 35 x 7.5; 2.5 mm²; Push-in CAGE CLAMP®; 2,50 mm²; gray



Item No.: 2202-1861
4-conductor carrier terminal block; with push-button; for DIN-rail 35 x 15 and 35 x 7.5; 2.5 mm²; Push-in CAGE CLAMP®; 2,50 mm²; gray

Installation Notes

Installation

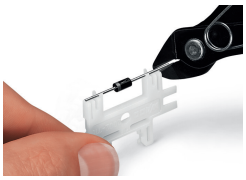

Cutting component to the proper length.



Pressing component into plug contact via operating tool

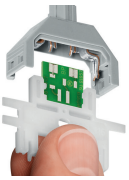

Pushing PCB into plug contact via operating tool.



When closing the cover, please insert cover as shown in the illustration!



Opening the cover via operating tool (2.5 mm blade).



Opening cover via multi-purpose operating tool for component plugs.

Installation

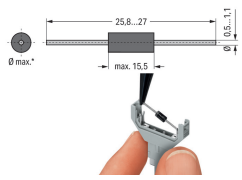

*max. 3.4 mm Ø at 5.2 mm module width and
*max. 5.4 mm Ø at 10.4 mm module width
Notice: Reconnection only possible with similar or larger wire diameter



Component plugs for building custom circuits
Solder-free assembly of diodes, resistors, etc.
(Illustration shows a 1N4007 diode)

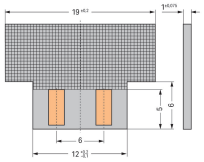

Dimensions of self-assembled PCBs:
Module height: 2 mm at 5.2 mm module width and module height: 3.3 mm at 10.4 mm module width