Data Sheet | Item Number: 2020-106

1-conductor female connector; Push-in CAGE CLAMP®; 1.5 mm²; Pin spacing 3.5 mm; 6-pole; 1,50 mm²; gray

https://www.wago.com/2020-106

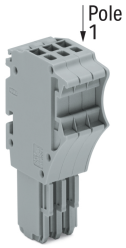

Color: gray

Similar to illustration

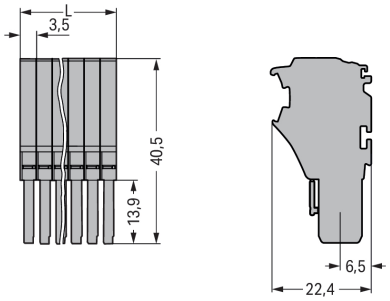

L = (pole no. x module width) + 0.7 mm

Dimensions in mm

Female connector, 2020 Series, gray

Enjoy easy electrical installations with this female connector (item number 2020-106). Strip lengths must be between 9 and 11 mm when connecting conductors to this female connector. Pluggable rail-mount terminal blocks are primarily found in switchgear units and control systems, most notably in railroad technology. These innovative systems combine the benefits of rail-mount terminal blocks and connectors for a flexible and reliable wiring system. You also have the option of pre-assembling installations, which not only makes production but also installation, operation, and maintenance more efficient and cost-effective. Featuring conductor terminals along with Push-in CAGE CLAMP®, this connector delivers reliable performance. Our Push-in CAGE CLAMP® is a universal, maintenance-free connection solution for all conductor types, featuring a winning design: It allows direct insertion of both solid and fine-stranded conductors with ferrules without needing tools. No preparation is required; for example, crimping the conductor's ferrule is not necessary. The dimensions are (21.7 x 40.5 x 22.4) mm (width x height x depth). Depending on the conductor type, this female connector is ideal for conductor cross sections ranging from 0.14 mm² to 1.5 mm².

This female connector/socket is operated with an operating tool.

Notes

Safety Information	According to EN 61984, pluggable connectors without current interrupting capacity must not be mated or unmated when live or under load.
Safety information 2	Notice: An appropriate end plate must be applied to the carrier terminal blocks after each female plug.

Electrical data

Ratings per	IEC/EN 61984		
Overvoltage category	III	III	II
Pollution degree	3	2	2
Nominal voltage	500 V	-	-
Rated impulse withstand voltage	6 kV	-	-
Rated current	13.5 A	-	-

Approvals per	UL 1059		
Use group	B	C	D
Rated voltage	300 V	300 V	300 V
Rated current	15 A	15 A	15 A

Approvals per	CSA 22.2 No 158		
Use group	B	C	D
Rated voltage	300 V	300 V	300 V
Rated current	10 A	10 A	10 A

General information	
Wiring direction	Front-entry wiring

Connection Data

Clamping units	6
Total number of potentials	6

Connection 1

Connection technology	Push-in CAGE CLAMP®
Actuation type	Operating tool
Connectable conductor materials	Copper
Nominal cross-section	1 mm²
Solid conductor	0.14 … 1.5 mm² / 24 … 16 AWG
Solid conductor; push-in termination	0.5 … 1.5 mm² / 20 … 16 AWG
Fine-stranded conductor	0.14 … 1.5 mm² / 24 … 16 AWG
Fine-stranded conductor; with insulated ferrule	0.14 … 0.75 mm² / 24 … 18 AWG
Fine-stranded conductor; with ferrule; push-in termination	0.5 … 0.75 mm² / 20 … 18 AWG
Note (conductor cross-section)	Depending on the conductor characteristic, a conductor with a smaller cross-section can also be inserted via push-in termination.
Strip length	9 … 11 mm / 0.35 … 0.43 inches
Pole number	6
Wiring direction	Front-entry wiring

Physical data

Width	21.7 mm / 0.854 inches
Height	40.5 mm / 1.594 inches
Depth	22.4 mm / 0.882 inches
Module width	3.5 mm / 0.138 inches

Mechanical data

Variable coding	Yes
Marking level	Side marking
Anti-rotation protection	Yes

Plug-in connection

Contact type (pluggable connector)	Female connector/socket
Connector (connection type)	for conductor
Mismating protection	No

Material data

Note (material data)	Information on material specifications can be found here
Color	gray
Material group	I
Insulation material (main housing)	Polyamide (PA66)
Flammability class per UL94	V0
Fire load	0.223 MJ
Weight	13.9 g

Continued on next page

Environmental requirements

Processing temperature	-35 … +85 °C
Continuous operating temperature	-60 … +105 °C

Commercial data

PU (SPU)	25 pcs
Packaging type	Box
Country of origin	CN
GTIN	4050821245070
Customs tariff number	85366990990

Product Classification

UNSPSC	39121409
eCl@ss 10.0	27-14-11-06
eCl@ss 9.0	27-14-11-06
ETIM 9.0	EC001284
ETIM 10.0	EC001284
ECCN	NO US CLASSIFICATION

Environmental Product Compliance

RoHS Compliance Status	Compliant,No Exemption

Approvals / Certificates

General approvals

Approval	Standard	Certificate Name
CCA DEKRA Certification B.V.	EN 60947	NTR NL 7617
CSA DEKRA Certification B.V.	C22.2	2516073
UL UL International Germany GmbH	UL 1059	E 45172

Declarations of conformity and manufacturer's declarations

Approval	Standard	Certificate Name
EU-Declaration of Conformity WAGO GmbH & Co. KG	-	-
UK-Declaration of Conformity WAGO GmbH & Co. KG	-	-

Approvals for marine applications

Approval	Standard	Certificate Name
ABS American Bureau of Shipping	EN 60947	24-0152298-PDA

Continued on next page

Downloads

Environmental Product Compliance

Compliance Search

Environmental Product Compliance 2020-106

Documentation

Bid Text

2020-106	19.02.2019	xml 3.90 KB
2020-106	06.08.2018	docx 14.99 KB

CAD/CAE-Data

CAD data

2D/3D Models 2020-106

CAE data

EPLAN Data Portal 2020-106

WSCAD Universe 2020-106

ZUKEN Portal 2020-106

1 Compatible Products

1.1 Optional Accessories

1.1.1 Ferrule

1.1.1.1 Ferrule

Item No.: 216-241
Ferrule; Sleeve for 0.5 mm² / 20 AWG; insulated; electro-tin plated; electrolytic copper; gastight crimped; acc. to DIN 46228, Part 4/09.90; white

Item No.: 216-242
Ferrule; Sleeve for 0.75 mm² / 18 AWG; insulated; electro-tin plated; electrolytic copper; gastight crimped; acc. to DIN 46228, Part 4/09.90; gray

Item No.: 216-243
Ferrule; Sleeve for 1 mm² / AWG 18; insulated; electro-tin plated; electrolytic copper; gastight crimped; acc. to DIN 46228, Part 4/09.90; red

1.1.2 Locking system

1.1.2.1 Locking system



Item No.: 2022-151
Locking lever; gray



Item No.: 2022-152
Locking lever; orange

1.1.3 Marking

1.1.3.1 Marker

Item No.: 793-3501
WMB marking card; as card; plain; snap-on type; white



Item No.: 2009-113
WMB-Inline; for Smart Printer; 2300 pieces on roll; plain; snap-on type; white

1.1.3.2 Marking strip



Item No.: 210-833
Marking strips; 25 m on roll; 6 mm wide; plain; Self-adhesive; white



Item No.: 2009-110
Marking strips; for Smart Printer; on reel; not stretchable; plain; snap-on type; white



Item No.: 210-831
Marking strips; on reel; 2.3 mm wide; plain; Self-adhesive; white



Item No.: 210-832
Marking strips; on reel; 3 mm wide; plain; Self-adhesive; white



Item No.: 210-834
Marking strips; on reel; 5 mm wide; plain; Self-adhesive; white

1.1.4 Protective warning marker

1.1.4.1 Cover



Item No.: 2000-115
Protective warning marker; for 5 terminal blocks; with high-voltage symbol, black; yellow

1.1.5 Strain relief

1.1.5.1 Strain relief plate

Item No.: 734-328
Strain relief plate; for female and male connectors; 12.5 mm wide; 1 part; gray

1.1.6 Tool

1.1.6.1 Operating tool



Item No.: 210-719
Operating tool; Blade: 2.5 x 0.4 mm; with a partially insulated shaft



Item No.: 210-648
Operating tool; Blade: 2.5 x 0.4 mm; with a partially insulated shaft; angled; short



Item No.: 210-647
Operating tool; Blade: 2.5 x 0.4 mm; with a partially insulated shaft; multicoloured

Continued on next page

Installation Notes

Coding

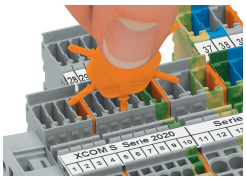

Insert coding pin into the corresponding slot and twist it off.



Coding a female plug: remove coding finger using a suitable tool.

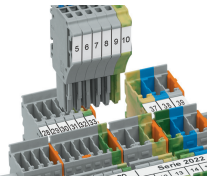

Insert coded female plug into X-COM®S-SYSTEM terminal block assembly.

Locking system

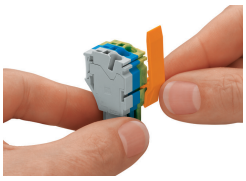

Slide the locking lever into position.

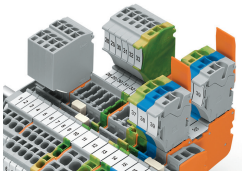

Female plugs can be individually locked.