Data Sheet | Item Number: 2020-111

1-conductor female connector; Push-in CAGE CLAMP®; 1.5 mm²; Pin spacing 3.5 mm; 11-pole; 1,50 mm²; gray

https://www.wago.com/2020-111

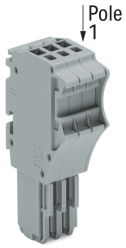

Color: gray

Similar to illustration

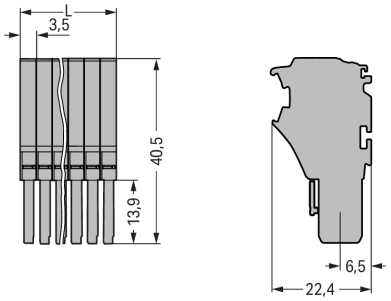

L = (pole no. x module width) + 0.7 mm

Dimensions in mm

Female connector, 2020 Series, operating tool

Our female connector (item number 2020-111) simplifies electrical installations. Strip lengths must be between 9 and 11 mm when connecting conductors to this female connector. Pluggable rail-mount terminal blocks are mainly used in switchgear units and control systems (e.g., in railroad technology). They are essentially a combination of rail-mount terminal blocks and pluggable connectors. You can also pre-assemble installations thanks to the variable wiring system. This saves both time and money during manufacture, installation, operation, and maintenance. This product features conductor terminals and utilizes Push-in CAGE CLAMP®. Push-in CAGE CLAMP® technology provides a universal connection solution for all conductor types. It allows both solid and fine-stranded conductors with ferrules to be inserted directly into the clamping point without the need for tools. The dimensions are (39.2 x 40.5 x 22.4) mm (width x height x depth). This female connector is suitable for conductor cross sections ranging from 0.14 mm² to 1.5 mm².

An operating tool is used to operate this female connector/socket.

Notes

Safety Information	According to EN 61984, pluggable connectors without current interrupting capacity must not be mated or unmated when live or under load.
Safety information 2	Notice: An appropriate end plate must be applied to the carrier terminal blocks after each female plug.

Electrical data

Ratings per	IEC/EN 61984		
Overvoltage category	III	III	II
Pollution degree	3	2	2
Nominal voltage	500 V	-	-
Rated impulse withstand voltage	6 kV	-	-
Rated current	13.5 A	-	-

Approvals per	UL 1059		
Use group	B	C	D
Rated voltage	300 V	300 V	300 V
Rated current	15 A	15 A	15 A

Approvals per	CSA 22.2 No 158		
Use group	B	C	D
Rated voltage	300 V	300 V	300 V
Rated current	10 A	10 A	10 A

General information	
Wiring direction	Front-entry wiring

Connection Data

Clamping units	11
Total number of potentials	11

Connection 1

Connection technology	Push-in CAGE CLAMP®
Actuation type	Operating tool
Connectable conductor materials	Copper
Nominal cross-section	1 mm²
Solid conductor	0.14 … 1.5 mm² / 24 … 16 AWG
Solid conductor; push-in termination	0.5 … 1.5 mm² / 20 … 16 AWG
Fine-stranded conductor	0.14 … 1.5 mm² / 24 … 16 AWG
Fine-stranded conductor; with insulated ferrule	0.14 … 0.75 mm² / 24 … 18 AWG
Fine-stranded conductor; with ferrule; push-in termination	0.5 … 0.75 mm² / 20 … 18 AWG
Note (conductor cross-section)	Depending on the conductor characteristic, a conductor with a smaller cross-section can also be inserted via push-in termination.
Strip length	9 … 11 mm / 0.35 … 0.43 inches
Pole number	11
Wiring direction	Front-entry wiring

Physical data

Width	39.2 mm / 1.543 inches
Height	40.5 mm / 1.594 inches
Depth	22.4 mm / 0.882 inches
Module width	3.5 mm / 0.138 inches

Mechanical data

Variable coding	Yes
Marking level	Side marking
Anti-rotation protection	Yes

Plug-in connection

Contact type (pluggable connector)	Female connector/socket
Connector (connection type)	for conductor
Mismating protection	No

Material data

Note (material data)	Information on material specifications can be found here
Color	gray
Material group	I
Insulation material (main housing)	Polyamide (PA66)
Flammability class per UL94	V0
Fire load	0.398 MJ
Weight	25 g

Continued on next page

Environmental requirements

Processing temperature	-35 … +85 °C
Continuous operating temperature	-60 … +105 °C

Commercial data

Product Group	18 (X-COM-System)
PU (SPU)	20 pcs
Packaging type	Box
Country of origin	DE
GTIN	4045454853631
Customs tariff number	85366990990

Product Classification

UNSPSC	39121409
eCl@ss 10.0	27-14-11-06
eCl@ss 9.0	27-14-11-06
ETIM 9.0	EC001284
ETIM 10.0	EC001284
ECCN	NO US CLASSIFICATION

Environmental Product Compliance

RoHS Compliance Status	Compliant,No Exemption

Approvals / Certificates

General approvals

Approval	Standard	Certificate Name
CCA DEKRA Certification B.V.	EN 60947	NTR NL 7617
CSA DEKRA Certification B.V.	C22.2	2516073
UL UL International Germany GmbH	UL 1059	E 45172

Declarations of conformity and manufacturer's declarations

Approval	Standard	Certificate Name
EU-Declaration of Conformity WAGO GmbH & Co. KG	-	-
UK-Declaration of Conformity WAGO GmbH & Co. KG	-	-

Approvals for marine applications

Approval	Standard	Certificate Name
ABS American Bureau of Shipping	EN 60947	24-0152298-PDA
LR Lloyds Register	EN 60947	LR23325966TA

Continued on next page

Downloads

Environmental Product Compliance

Compliance Search

Environmental Product Compliance 2020-111

Documentation

Bid Text

2020-111	19.02.2019	xml 3.90 KB
2020-111	06.08.2018	docx 15.00 KB

CAD/CAE-Data

CAD data

2D/3D Models 2020-111

CAE data

EPLAN Data Portal 2020-111

WSCAD Universe 2020-111

ZUKEN Portal 2020-111

1 Compatible Products

1.1 Optional Accessories

1.1.1 Ferrule

1.1.1.1 Ferrule

Item No.: 216-241
Ferrule; Sleeve for 0.5 mm² / 20 AWG; insulated; electro-tin plated; electrolytic copper; gastight crimped; acc. to DIN 46228, Part 4/09.90; white

Item No.: 216-242
Ferrule; Sleeve for 0.75 mm² / 18 AWG; insulated; electro-tin plated; electrolytic copper; gastight crimped; acc. to DIN 46228, Part 4/09.90; gray

Item No.: 216-243
Ferrule; Sleeve for 1 mm² / AWG 18; insulated; electro-tin plated; electrolytic copper; gastight crimped; acc. to DIN 46228, Part 4/09.90; red

1.1.2 Locking system

1.1.2.1 Locking system



Item No.: 2022-151
Locking lever; gray



Item No.: 2022-152
Locking lever; orange

Continued on next page

1.1.3 Marking

1.1.3.1 Marker

Item No.: 793-3501
WMB marking card; as card; plain; snap-on type; white



Item No.: 2009-113
WMB-Inline; for Smart Printer; 2300 pieces on roll; plain; snap-on type; white

1.1.3.2 Marking strip



Item No.: 210-833
Marking strips; 25 m on roll; 6 mm wide; plain; Self-adhesive; white



Item No.: 2009-110
Marking strips; for Smart Printer; on reel; not stretchable; plain; snap-on type; white



Item No.: 210-831
Marking strips; on reel; 2.3 mm wide; plain; Self-adhesive; white



Item No.: 210-832
Marking strips; on reel; 3 mm wide; plain; Self-adhesive; white



Item No.: 210-834
Marking strips; on reel; 5 mm wide; plain; Self-adhesive; white

1.1.4 Protective warning marker

1.1.4.1 Cover



Item No.: 2000-115
Protective warning marker; for 5 terminal blocks; with high-voltage symbol, black; yellow

1.1.5 Strain relief

1.1.5.1 Strain relief plate

Item No.: 734-326
Strain relief plate; for female and male connectors; 35 mm wide; 1 part; gray

1.1.6 Tool

1.1.6.1 Operating tool



Item No.: 210-719
Operating tool; Blade: 2.5 x 0.4 mm; with a partially insulated shaft



Item No.: 210-648
Operating tool; Blade: 2.5 x 0.4 mm; with a partially insulated shaft; angled; short



Item No.: 210-647
Operating tool; Blade: 2.5 x 0.4 mm; with a partially insulated shaft; multicoloured

Continued on next page

Installation Notes

Coding

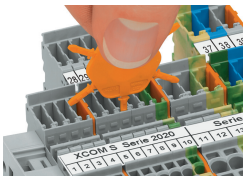

Insert coding pin into the corresponding slot and twist it off.



Coding a female plug: remove coding finger using a suitable tool.

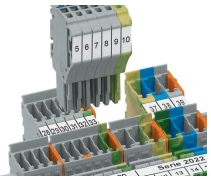

Insert coded female plug into X-COM®S-SYSTEM terminal block assembly.

Locking system

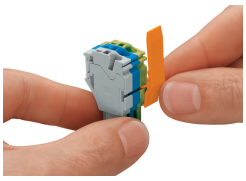

Slide the locking lever into position.

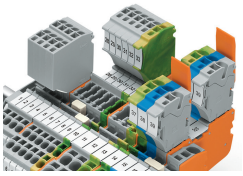

Female plugs can be individually locked.