# Data Sheet | Item Number: 2060-1451/998-404

THR PCB terminal block; push-button; 0.75 mm²; Pin spacing 4 mm; 1-pole; Push-in CAGE CLAMP®; in tape-and-reel packaging; white

https://www.wago.com/2060-1451/998-404



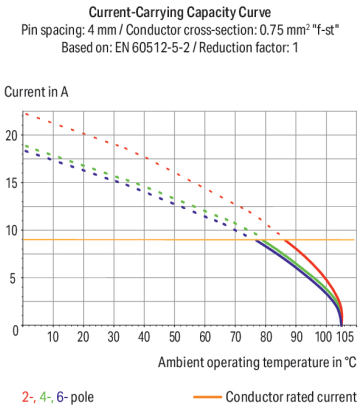


Color: white

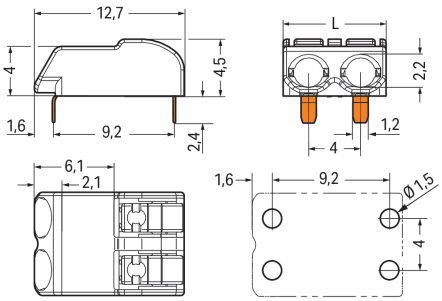


Dimensions in mm
L = (pole no. x pin spacing) – 0.1 mm

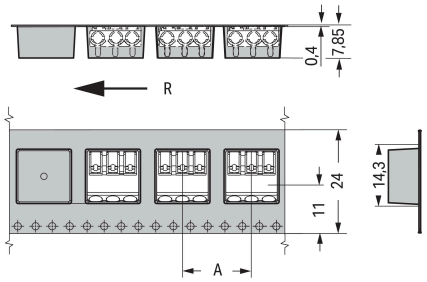


Dimensions in mm
R = feed directionA = (pole no. x pin spacing) + 4 mm

PCB terminal block, 2060 Series, white

Our PCB terminal block (item number 2060-1451/998-404) ensures effortless electrical installations. You can count on tried and tested safety with these PCB terminal blocks, perfect for a wide variety of applications when designing your devices. Conductors should only be connected to this PCB terminal block if their strip length is between 6 and 7 mm . This product features one conductor terminal and utilizes Push-in CAGE CLAMP®. Our Push-in CAGE CLAMP® is a universal, maintenance-free connection solution for all conductor types, featuring a winning design: It allows direct insertion of both solid and fine-stranded conductors with ferrules without needing tools. No preparation is required; for example, crimping the conductor's ferrule is not necessary. Dimensions: (3.9 x 6.9 x 12.7) mm (width x height x depth). This PCB terminal block is suitable for conductor cross sections ranging from 0.2 mm² to 0.75 mm².

The contact surface is coated with tin. A push-button is used to operate this PCB terminal block. The PCB terminal block is designed for THR soldering. The conductor is designed to be inserted into the board at an angle of 0°..

## Notes

| | |
|---|---|
| General safety information | **NOTICE: Observe installation and safety instructions!**<br><br>**To be sold only with installation instructions!** |
| Note | Application notes:<br>Suitable for lead-free, reflow-soldering profiles per DIN EN 61760-1 and IEC 60068-2-58 up to max. 260°C peak temperature. Due to application-specific variables (component configuration and orientation, type of soldering machine, solder paste), trial runs are recommended to ensure product and process compatibility under actual manufacturing conditions.<br><br>Depending on reflow soldering temperatures and times, color deviations may occur. These deviations will have no impact on functionality. |
| Recommendation | Recommendation for stencil:<br>150 µm material thicknessStencil hole diameter identical to metal-plated PCB hole outer diameter |

## Electrical data

| Ratings per | IEC/EN 60664-1 | | |
|---|---|---|---|
| Overvoltage category | III | III | II |
| Pollution degree | 3 | 2 | 2 |
| Nominal voltage | 63 V | 160 V | 320 V |
| Rated impulse withstand voltage | 2.5 kV | 2.5 kV | 2.5 kV |
| Rated current | 9 A | 9 A | 9 A |

### Ratings

| | |
|---|---|
| Approvals per | UL 1977 |
| Rated voltage | 600 V |
| Rated current | 9 A |

## Connection Data

| | |
|---|---|
| Clamping units | 1 |
| Total number of potentials | 1 |
| Number of connection types | 1 |
| Number of levels | 1 |

### Connection 1

| | |
|---|---|
| Connection technology | Push-in CAGE CLAMP® |
| Actuation type | Push-button |
| Solid conductor | 0.2 … 0.75 mm² / 24 … 18 AWG |
| Fine-stranded conductor | 0.2 … 0.75 mm² / 24 … 18 AWG |
| Fine-stranded conductor; with insulated ferrule | 0.25 … 0.34 mm² |
| Fine-stranded conductor; with uninsulated ferrule | 0.25 … 0.34 mm² |
| Strip length | 6 … 7 mm / 0.24 … 0.28 inches |
| Conductor connection direction to PCB | 0 ° |
| Pole number | 1 |

## Physical data

| | |
|---|---|
| Pin spacing | 4 mm / 0.157 inches |
| Width | 3.9 mm / 0.154 inches |
| Height | 6.9 mm / 0.272 inches |
| Height from the surface | 4.5 mm / 0.177 inches |
| Depth | 12.7 mm / 0.5 inches |
| Solder pin length | 2.4 mm |
| Solder pin dimensions | 1.2 x 0.75 mm |
| Plated through-hole diameter (THR) | 1.5 $^{(+0.1)}$ mm |
| Reel diameter of tape-and-reel packaging | 330 mm |
| Tape width | 24 mm |


Continued on next page

## PCB contact

| | |
|---|---|
| PCB contact | THR |
| Solder pin arrangement | over the entire terminal strip (in-line) |
| Number of solder pins per potential | 2 |

## Material data

| | |
|---|---|
| Note (material data) | Information on material specifications can be found here |
| Color | white |
| Material group | I |
| Insulation material (main housing) | Polyphthalamide (PPA GF) |
| Flammability class per UL94 | V0 |
| Clamping spring material | Copper alloy |
| Contact material | Copper alloy |
| Contact Plating | Tin |
| Fire load | 0.001 MJ |
| Weight | 0.2 g |
| MSL per J-STD 020D | 1 |

## Environmental requirements

| | |
|---|---|
| Limit temperature range | -60 … +105 °C |

## Commercial data

| | |
|---|---|
| PU (SPU) | 10800 (1200) pcs |
| Packaging type | Box |
| Country of origin | CN |
| GTIN | 4055143889148 |
| Customs tariff number | 85369010000 |

## Product Classification

| | |
|---|---|
| UNSPSC | 39121409 |
| eCl@ss 10.0 | 27-14-11-06 |
| eCl@ss 9.0 | 27-14-11-06 |
| ETIM 9.0 | EC001284 |
| ETIM 10.0 | EC001284 |
| ECCN | NO US CLASSIFICATION |

## Environmental Product Compliance

| | |
|---|---|
| RoHS Compliance Status | Compliant,No Exemption |

## Approvals / Certificates

### General approvals

| Approval | Standard | Certificate Name |
|---|---|---|
| CCA<br>DEKRA Certification B.V. | EN 60998 | NTR NL 7725/M1 |

### General approvals

| | | |
|---|---|---|
| CCA<br>DEKRA Certification B.V. | EN 60838 | NTR NL 2168246 |
| CCA<br>DEKRA Certification B.V. | EN 60947 | NTR NL-7724 |
| cURus<br>Underwriters Laboratories Inc. | UL 1977 | E45171 |
| KEMA/KEUR<br>DEKRA Certification B.V. | EN 60947 | 71-108183 |
| KEMA/KEUR<br>DEKRA Certification B.V. | EN 60998 | 71-109040 |


Continued on next page

## General approvals

| | | |
|---|---|---|
| KEMA/KEUR<br>DEKRA Certification B.V. | EN 60947-7-4 | 71-114208 |
| UL<br>Underwriters Laboratories Inc. | UL 1059 | E45172 |

## Declarations of conformity and manufacturer's declarations

| Approval | Standard | Certificate Name |
|---|---|---|
| EU-Declaration of Conformity<br>WAGO GmbH & Co. KG | - | - |
| UK-Declaration of Conformity<br>WAGO GmbH & Co. KG | - | - |

## Downloads

### Environmental Product Compliance

**Compliance Search**

Environmental Product Compliance
2060-1451/998-404

### Documentation

**Safety Data Sheet**

| | | |
|---|---|---|
| Handling and Safety Instructions of PCB Terminal Blocks with Push-In Cage Clamp | pdf<br>393.90 KB | |

**Additional Information**

| | | |
|---|---|---|
| Technical Section | 03.04.2019 | pdf<br>2027.26 KB |
| | | pdf<br>535.32 KB |

### CAD/CAE-Data

**CAD data**

2D/3D Models
2060-1451/998-404

**CAE data**

ZUKEN Portal
2060-1451/998-404

**PCB Design**

Symbol and Footprint via SamacSys
2060-1451/998-404

Symbol and Footprint via Ultra Librarian
2060-1451/998-404


Continued on next page

## 1 Compatible Products

### 1.1 Optional Accessories

#### 1.1.1 Ferrule

##### 1.1.1.1 Ferrule



Item No.: 216-131
Ferrule; Sleeve for 0.25 mm² / AWG 24; uninsulated; electro-tin plated; silver-colored



Item No.: 216-132
Ferrule; Sleeve for 0.34 mm² / 22 AWG; uninsulated; electro-tin plated

#### 1.1.2 Tool

##### 1.1.2.1 Operating tool



Item No.: 206-860
Operating tool; for 2060 Series; multicoloured



Item No.: 2060-189
Operating tool; made of insulating material; for 2060 Series; white

## Installation Notes

### Conductor termination

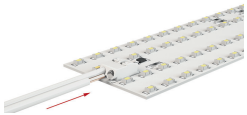

Insert solid conductors via push-in termination.

### Conductor termination

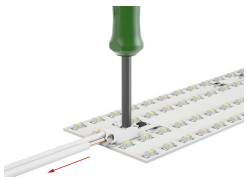

Insert/remove fine-stranded conductors by lightly pressing on push-button, e.g., via optional operating tool (206-860).