Data Sheet | Item Number: 2060-1453/998-404

THR PCB terminal block; push-button; 0.75 mm²; Pin spacing 4 mm; 3-pole; Push-in CAGE CLAMP®; in tape-and-reel packaging; white

https://www.wago.com/2060-1453/998-404



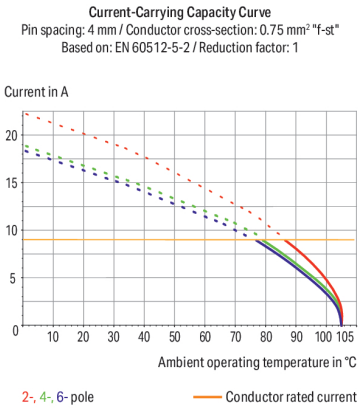

Color: white

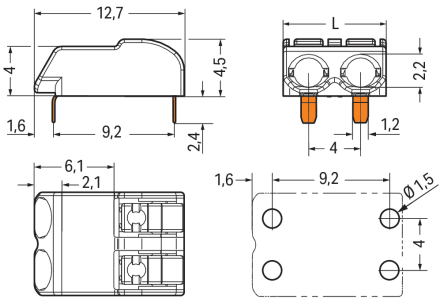

Dimensions in mm
L = (pole no. x pin spacing) – 0.1 mm

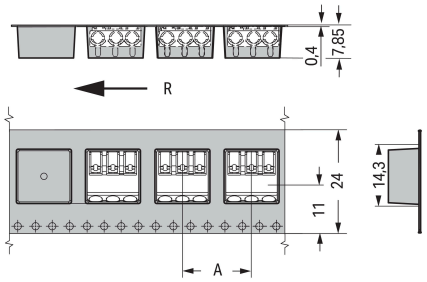

Dimensions in mm
R = feed directionA = (pole no. x pin spacing) + 4 mm

PCB terminal block, 2060 Series, with 4 mm pin spacing

Easily, quickly and safely connect conductors with this PCB terminal block (item number 2060-1453/998-404). You can rely on proven safety with these PCB terminal blocks, perfect for a wide variety of applications when designing your devices. Ensure that the strip lengths are between 6 and 7 mm when connecting conductors to this PCB terminal block. This product incorporates one conductor terminal and utilizes Push-in CAGE CLAMP®. Our Push-in CAGE CLAMP® is a universal, maintenance-free connection solution for all conductor types, offering a key advantage: both solid and fine-stranded conductors with ferrules can be directly inserted without the need for tools or any preparation, such as crimping the ferrule. Dimensions: (11.9 x 6.9 x 12.7) mm (width x height x depth). This PCB terminal block is suitable for conductor cross sections ranging from 0.2 mm² to 0.75 mm².

The contact surface is coated with tin. A push-button is used to operate this PCB terminal block. The PCB terminal block is designed for THR soldering. Insert the conductor into the board at a 0° angle..

Notes

General safety information	**NOTICE: Observe installation and safety instructions!** **To be sold only with installation instructions!**
Note	Application notes: Suitable for lead-free, reflow-soldering profiles per DIN EN 61760-1 and IEC 60068-2-58 up to max. 260°C peak temperature. Due to application-specific variables (component configuration and orientation, type of soldering machine, solder paste), trial runs are recommended to ensure product and process compatibility under actual manufacturing conditions. Depending on reflow soldering temperatures and times, color deviations may occur. These deviations will have no impact on functionality.
Recommendation	Recommendation for stencil: 150 µm material thicknessStencil hole diameter identical to metal-plated PCB hole outer diameter

Electrical data

Ratings per	IEC/EN 60664-1		
Overvoltage category	III	III	II
Pollution degree	3	2	2
Nominal voltage	63 V	160 V	320 V
Rated impulse withstand voltage	2.5 kV	2.5 kV	2.5 kV
Rated current	9 A	9 A	9 A

Ratings

Approvals per	UL 1977
Rated voltage	600 V
Rated current	9 A

Connection Data

Clamping units	3
Total number of potentials	3
Number of connection types	1
Number of levels	1

Connection 1

Connection technology	Push-in CAGE CLAMP®
Actuation type	Push-button
Solid conductor	0.2 … 0.75 mm² / 24 … 18 AWG
Fine-stranded conductor	0.2 … 0.75 mm² / 24 … 18 AWG
Fine-stranded conductor; with insulated ferrule	0.25 … 0.34 mm²
Fine-stranded conductor; with uninsulated ferrule	0.25 … 0.34 mm²
Strip length	6 … 7 mm / 0.24 … 0.28 inches
Conductor connection direction to PCB	0 °
Pole number	3

Physical data

Pin spacing	4 mm / 0.157 inches
Width	11.9 mm / 0.467 inches
Height	6.9 mm / 0.272 inches
Height from the surface	4.5 mm / 0.177 inches
Depth	12.7 mm / 0.5 inches
Solder pin length	2.4 mm
Solder pin dimensions	1.2 x 0.75 mm
Plated through-hole diameter (THR)	1.5 $^{(+0.1)}$ mm
Reel diameter of tape-and-reel packaging	330 mm
Tape width	24 mm

Continued on next page

PCB contact

PCB contact	THR
Solder pin arrangement	over the entire terminal strip (in-line)
Number of solder pins per potential	2

Material data

Note (material data)	Information on material specifications can be found here
Color	white
Material group	I
Insulation material (main housing)	Polyphthalamide (PPA GF)
Flammability class per UL94	V0
Clamping spring material	Copper alloy
Contact material	Copper alloy
Contact Plating	Tin
Fire load	0.005 MJ
Weight	0.8 g
MSL per J-STD 020D	1

Environmental requirements

Limit temperature range	-60 … +105 °C

Commercial data

PU (SPU)	4950 (550) pcs
Packaging type	Box
Country of origin	CN
GTIN	4055143889056
Customs tariff number	85369010000

Product Classification

UNSPSC	39121409
eCl@ss 10.0	27-14-11-06
eCl@ss 9.0	27-14-11-06
ETIM 9.0	EC001284
ETIM 10.0	EC001284
ECCN	NO US CLASSIFICATION

Environmental Product Compliance

RoHS Compliance Status	Compliant,No Exemption

Approvals / Certificates

General approvals

Approval	Standard	Certificate Name
CCA DEKRA Certification B.V.	EN 60998	NTR NL 7725/M1

General approvals

CCA DEKRA Certification B.V.	EN 60838	NTR NL 2168246
CCA DEKRA Certification B.V.	EN 60947	NTR NL-7724
cURus Underwriters Laboratories Inc.	UL 1977	E45171
KEMA/KEUR DEKRA Certification B.V.	EN 60947	71-108183
KEMA/KEUR DEKRA Certification B.V.	EN 60998	71-109040

Continued on next page

General approvals

KEMA/KEUR DEKRA Certification B.V.	EN 60947-7-4	71-114208
UL Underwriters Laboratories Inc.	UL 1059	E45172

Declarations of conformity and manufacturer's declarations

Approval	Standard	Certificate Name
EU-Declaration of Conformity WAGO GmbH & Co. KG	-	-
UK-Declaration of Conformity WAGO GmbH & Co. KG	-	-

Downloads

Environmental Product Compliance

Compliance Search

Environmental Product Compliance
2060-1453/998-404

Documentation

Safety Data Sheet

Handling and Safety Instructions of PCB Terminal Blocks with Push-In Cage Clamp	pdf 393.90 KB	

Additional Information

Technical Section	03.04.2019	pdf 2027.26 KB
		pdf 535.32 KB

CAD/CAE-Data

CAD data

2D/3D Models
2060-1453/998-404

CAE data

ZUKEN Portal
2060-1453/998-404

PCB Design

Symbol and Footprint via SamacSys
2060-1453/998-404

Symbol and Footprint via Ultra Librarian
2060-1453/998-404

Continued on next page

1 Compatible Products

1.1 Optional Accessories

1.1.1 Ferrule

1.1.1.1 Ferrule

Item No.: 216-131
Ferrule; Sleeve for 0.25 mm² / AWG 24; uninsulated; electro-tin plated; silver-colored

Item No.: 216-132
Ferrule; Sleeve for 0.34 mm² / 22 AWG; uninsulated; electro-tin plated

1.1.2 Tool

1.1.2.1 Operating tool



Item No.: 206-860
Operating tool; for 2060 Series; multicoloured



Item No.: 2060-189
Operating tool; made of insulating material; for 2060 Series; white

Installation Notes

Conductor termination

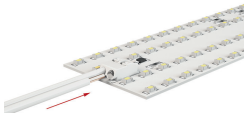

Insert solid conductors via push-in termination.

Conductor termination

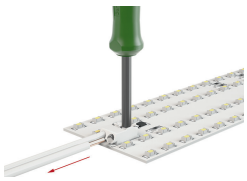

Insert/remove fine-stranded conductors by lightly pressing on push-button, e.g., via optional operating tool (206-860).