Data Sheet | Item Number: 2060-951/028-000

Board-to-Board Link; Pin spacing 4 mm; 1-pole; Length: 28 mm; white

https://www.wago.com/2060-951/028-000



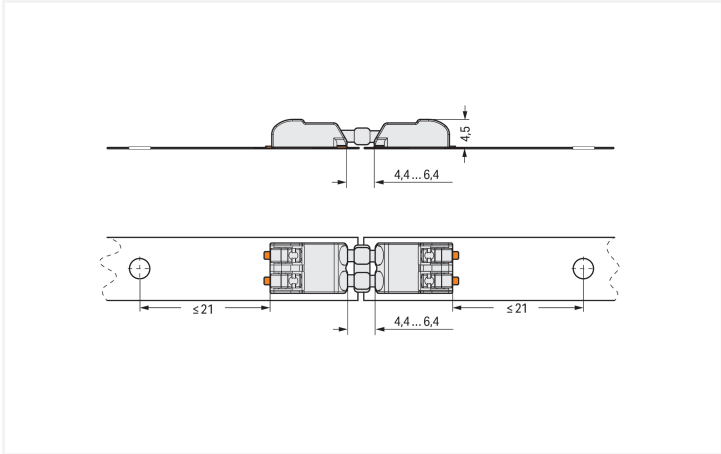

Color: white

Dimensions in mm

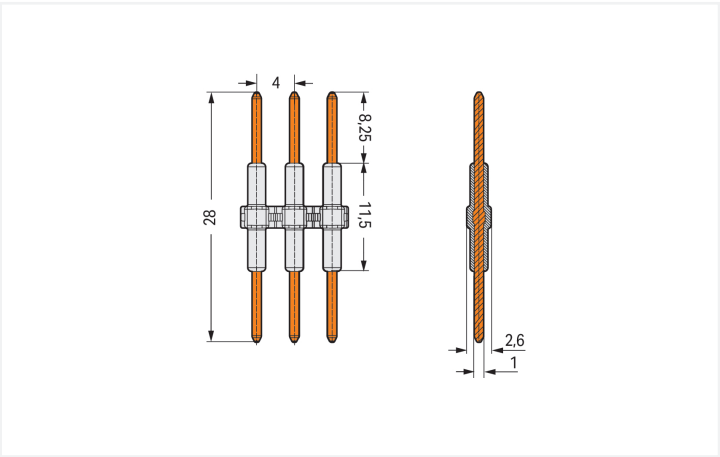

Dimensions in mm

- Board-to-board links simplify LED module assembly
- Easy push-in connection and disconnection

Notes

Safety Information	**Notice:** Only suitable for 2060-45x, not for 2060-40x.

Electrical data

Ratings per	IEC/EN 60664-1		
Overvoltage category	III	III	II
Pollution degree	3	2	2
Nominal voltage	63 V	160 V	320 V
Rated impulse withstand voltage	2.5 kV	2.5 kV	2.5 kV
Rated current	9 A	9 A	9 A

Ratings	
Approvals per	UL 1977
Rated voltage	250 V
Rated current	9 A

Connection Data

Total number of potentials	1

Connection 1

Pole number	1

Physical data

Pin spacing	4 mm / 0.157 inches
Width	3.4 mm / 0.134 inches
Height	2.6 mm / 0.102 inches
Depth	28 mm / 1.102 inches

Mechanical data

Mating cycles (max.)	10
Number of mating cycles	10 connections/disconnections (max.)
Suitable	for SMD PCB terminal blocks (2060 Series)

Material data

Note (material data)	Information on material specifications can be found here
Color	white
Material group	I
Insulation material (main housing)	Polyamide (PA66)
Flammability class per UL94	V0
Contact material	Copper alloy
Contact Plating	Silver
Fire load	0.001 MJ
Weight	0.2 g

Environmental requirements

Limit temperature range	-60 … +105 °C

Environmental Testing

Test specification: Railway applications – Rolling stock – Electronic equipment	DIN EN 50155 (VDE 0115-200):2022-06
Test procedure: Railway applications – Rolling stock equipment – Vibration and shock tests	DIN EN 61373 (VDE 0115-0106):2011-04
Spectrum/Mounting location	Service life test, Category 1, Class A/B
Functional test with noise-like oscillations	Test passed according to Section 8 of the standard
Frequency	f_1 = 5 Hz to f_2 = 150 Hz
Acceleration	0.101g (highest test level used for all axes)
Test duration per axis	10 min.
Test directions	X, Y and Z axes
Monitoring of contact faults and interruptions	Passed
Voltage drop measurement before and after each axis	Passed
Simulated service life test through increased levels of noise-like oscillations	Test passed according to Section 9 of the standard
Frequency	f_1 = 5 Hz to f_2 = 150 Hz
Acceleration	0.572g (highest test level used for all axes)
Test duration per axis	5 h
Test directions	X, Y and Z axes

Continued on next page

Environmental Testing

Extended testing: Monitoring of contact faults and interruptions	Passed
Extended testing: Voltage drop measurement before and after each axis	Passed
Shock test	Test passed according to Section 10 of the standard
Shock pulse form	Half sine
Acceleration	5g (highest test level used for all axes)
Shock duration	30 ms
Number of shocks (per axis)	3 pos. und 3 neg.
Test directions	X, Y and Z axes
Extended testing: Monitoring of contact faults and interruptions	Passed
Extended testing: Voltage drop measurement before and after each axis	Passed
Vibration and shock stress for rolling stock equipment	Passed

Commercial data

PU (SPU)	1500 pcs
Packaging type	Box
Country of origin	CN
GTIN	4055143303880
Customs tariff number	85369010000

Product Classification

UNSPSC	39121409
eCl@ss 10.0	27-14-11-92
eCl@ss 9.0	27-14-11-92
ETIM 9.0	EC002848
ETIM 10.0	EC002848
ECCN	NO US CLASSIFICATION

Environmental Product Compliance

RoHS Compliance Status	Compliant,No Exemption

Approvals / Certificates

General approvals

Approval	Standard	Certificate Name
CCA DEKRA Certification B.V.	EN 60998	NTR NL 7725/M1
CCA DEKRA Certification B.V.	EN 60838	NTR NL 2168246
CCA DEKRA Certification B.V.	EN 60947-7-4	NTR NL 7843
CCA DEKRA Certification B.V.	EN 60947	NTR NL-7724

General approvals

cURus Underwriters Laboratories Inc.	UL 1977	E45171
KEMA/KEUR DEKRA Certification B.V.	EN 60947	71-108183
KEMA/KEUR DEKRA Certification B.V.	EN 60998	71-109040
KEMA/KEUR DEKRA Certification B.V.	EN 60947-7-4	71-114208

Continued on next page

Declarations of conformity and manufacturer's declarations

Approval	Standard	Certificate Name
EU-Declaration of Conformity WAGO GmbH & Co. KG	-	-
Railway WAGO GmbH & Co. KG	-	Z00004396.000
UK-Declaration of Conformity WAGO GmbH & Co. KG	-	-

Downloads

Environmental Product Compliance

Compliance Search

Environmental Product Compliance
2060-951/028-000

Documentation

Additional Information

Technical Section	03.04.2019	pdf 2027.26 KB

CAD/CAE-Data

CAD data

2D/3D Models
2060-951/028-000

CAE data

ZUKEN Portal
2060-951/028-000

Installation Notes

Installation

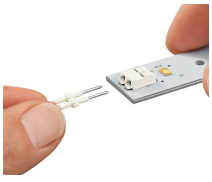

Inserting a board-to-board link into the terminal block.

Continued on next page

Installation

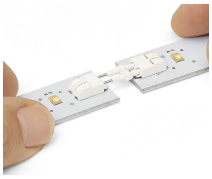

Assembly: Place PCBs on a flat surface and connect terminal blocks on adjoining PCBs via board-to-board link.
Disassembly: Pull PCBs apart (max. 10 mating cycles).

Installation

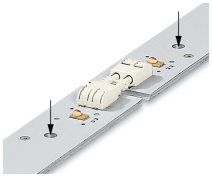

The PCBs must be secured.