# THR PCB terminal block; push-button; 1.5 mm²; Pin spacing 6 mm; 3-pole; Push-in CAGE CLAMP®; in tape-and-reel packaging; white

https://www.wago.com/2061-1603/998-404





Color: white





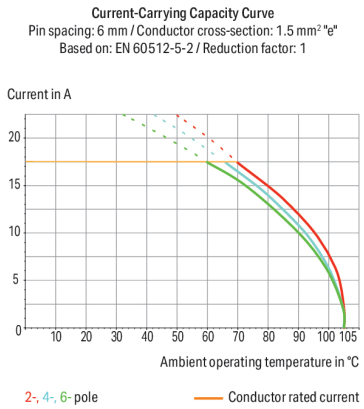


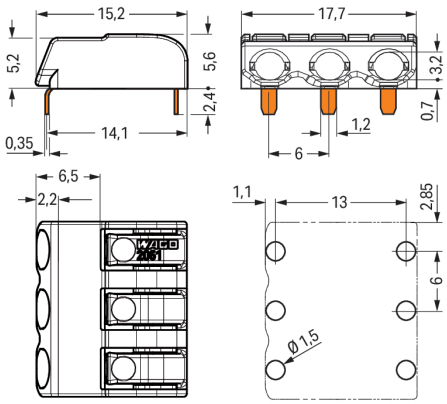


Dimensions in mm

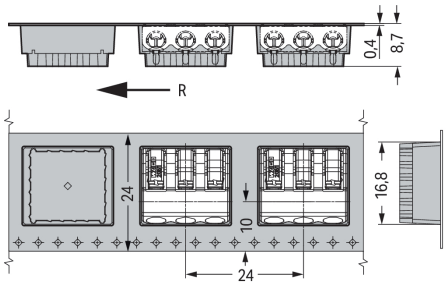


Dimensions in mm

PCB terminal block, 2061 Series, 0 °conductor entry to board

Connecting conductors is quick and easy with this PCB terminal block (item number 2061-1603/998-404). It is a universal connector that can be used practically anywhere, e.g., as a pluggable PCB connector, panel feedthrough header, connector for rail-mount terminal blocks, or a floating connector for different mounting methods. Ensure that the strip lengths are between 7 and 10 mm when connecting conductors to this PCB terminal block. This product features one conductor terminal and utilizes Push-in CAGE CLAMP®. Push-in CAGE CLAMP® technology provides a universal connection solution for all conductor types. It allows both solid and fine-stranded conductors with ferrules to be inserted directly into the clamping point without the need for tools. The dimensions are (17.7 x 8 x 15.2) mm (width x height x depth). Depending on the conductor type, this PCB terminal block is designed for conductor cross sections ranging from 0.25 mm² to 1.5 mm².

The contact surface is coated with tin. A push-button is used to operate this PCB terminal block. THR is used to solder the PCB terminal block. Insert the conductor into the board at an angle of 0°..

## Notes

| | |
|---|---|
| General safety information | **NOTICE: Observe installation and safety instructions!**<br><br>**To be sold only with installation instructions!** |
| Note | Application notes:<br>Suitable for lead-free, reflow-soldering profiles per DIN EN 61760-1 and IEC 60068-2-58 up to max. 260°C peak temperature. Due to application-specific variables (component configuration and orientation, type of soldering machine, solder paste), trial runs are recommended to ensure product and process compatibility under actual manufacturing conditions.<br><br>Depending on reflow soldering temperatures and times, color deviations may occur. These deviations will have no impact on functionality. |
| Recommendation | Recommendation for stencil:<br>150 µm material thickness<br>Stencil hole diameter identical to metal-plated PCB hole outer diameter |

## Electrical data

| Ratings per | IEC/EN 60664-1 | | |
|---|---|---|---|
| Overvoltage category | III | III | II |
| Pollution degree | 3 | 2 | 2 |
| Nominal voltage | 250 V | 320 V | 630 V |
| Rated impulse withstand voltage | 4 kV | 4 kV | 4 kV |
| Rated current | 17.5 A | 17.5 A | 17.5 A |

| Approvals per | UL 1059 | | |
|---|---|---|---|
| Use group | B | C | D |
| Rated voltage | 300 V | - | 300 V |
| Rated current | 10 A | - | 10 A |


Continued on next page

## Connection Data

| | |
|---|---|
| Clamping units | 3 |
| Total number of potentials | 3 |
| Number of connection types | 1 |
| Number of levels | 1 |

### Connection 1

| | |
|---|---|
| Connection technology | Push-in CAGE CLAMP® |
| Actuation type | Push-button |
| Solid conductor | 0.25 … 1.5 mm² / 20 … 16 AWG |
| Fine-stranded conductor | 0.5 … 1.5 mm² / 20 … 16 AWG |
| Fine-stranded conductor; with insulated ferrule | 0.5 … 0.75 mm² |
| Fine-stranded conductor; with uninsulated ferrule | 0.5 … 0.75 mm² |
| Strip length | 7 … 10 mm / 0.28 … 0.39 inches |
| Conductor connection direction to PCB | 0 ° |
| Pole number | 3 |

## Physical data

| | |
|---|---|
| Pin spacing | 6 mm / 0.24 inches |
| Width | 17.7 mm / 0.697 inches |
| Height | 8 mm / 0.315 inches |
| Height from the surface | 5.6 mm / 0.22 inches |
| Depth | 15.2 mm / 0.598 inches |
| Solder pin length | 2.4 mm |
| Solder pin dimensions | 1.2 x 0.35 mm |
| Plated through-hole diameter (THR) | 1.5 $^{(+0.1)}$ mm |
| Reel diameter of tape-and-reel packaging | 330 mm |
| Tape width | 24 mm |

## PCB contact

| | |
|---|---|
| PCB contact | THR |
| Solder pin arrangement | over the entire terminal strip (in-line) |
| Number of solder pins per potential | 2 |

## Material data

| | |
|---|---|
| Note (material data) | Information on material specifications can be found here |
| Color | white |
| Material group | I |
| Insulation material (main housing) | Polyphthalamide (PPA GF) |
| Flammability class per UL94 | V0 |
| Contact material | Copper alloy |
| Contact Plating | Tin |
| Fire load | 0.012 MJ |
| Weight | 1.6 g |
| MSL per J-STD 020D | 1 |


Continued on next page

## Environmental requirements

| | |
|---|---|
| Limit temperature range | -60 … +105 °C |

## Commercial data

| | |
|---|---|
| PU (SPU) | 2880 (320) pcs |
| Packaging type | Box |
| Country of origin | CN |
| GTIN | 4055144021028 |
| Customs tariff number | 85369010000 |

## Product Classification

| | |
|---|---|
| UNSPSC | 39121409 |
| eCl@ss 10.0 | 27-14-11-06 |
| eCl@ss 9.0 | 27-14-11-06 |
| ETIM 9.0 | EC001284 |
| ETIM 10.0 | EC001284 |
| ECCN | NO US CLASSIFICATION |

## Environmental Product Compliance

| | |
|---|---|
| RoHS Compliance Status | Compliant,No Exemption |

## Approvals / Certificates

### General approvals

| Approval | Standard | Certificate Name |
|---|---|---|
| CCA<br>DEKRA Certification B.V. | EN 60947-7-4 | NTR NL-7773 |
| CCA<br>DEKRA Certification B.V. | EN 60838 | NTR NL-7721 |
| cURus<br>Underwriters Laboratories Inc. | UL 1059 | E45172 |
| KEMA/KEUR<br>DEKRA Certification B.V. | EN 60947-7-4 | 71-110254 |
| KEMA/KEUR<br>DEKRA Certification B.V. | EN 60838 | 71-106232 |


Continued on next page

## Downloads

### Environmental Product Compliance

**Compliance Search**

Environmental Product Compliance
2061-1603/998-404

### Documentation

**Safety Data Sheet**

| | | |
|---|---|---|
| Handling and Safety Instructions of PCB Terminal Blocks with Push-In Cage Clamp | pdf<br>393.90 KB | |

**Additional Information**

| | | |
|---|---|---|
| Technical Section | 03.04.2019 | pdf<br>2027.26 KB |
| | | pdf<br>535.32 KB |

### CAD/CAE-Data

**CAD data**

2D/3D Models
2061-1603/998-404

**CAE data**

ZUKEN Portal
2061-1603/998-404

**PCB Design**

Symbol and Footprint via SamacSys
2061-1603/998-404

Symbol and Footprint via Ultra Librarian
2061-1603/998-404

## 1 Compatible Products

### 1.1 Optional Accessories

### 1.1.1 Ferrule

#### 1.1.1.1 Ferrule



Item No.: 216-201
Ferrule; Sleeve for 0.5 mm² / 20 AWG; insulated; electro-tin plated; electrolytic copper; acc. to DIN 46228, Part 4/09.90; white



Item No.: 216-241
Ferrule; Sleeve for 0.5 mm² / 20 AWG; insulated; electro-tin plated; electrolytic copper; gastight crimped; acc. to DIN 46228, Part 4/09.90; white



Item No.: 216-141
Ferrule; Sleeve for 0.5 mm² / 20 AWG; uninsulated; electro-tin plated; electrolytic copper; gastight crimped; acc. to DIN 46228, Part 1/08.92



Item No.: 216-101
Ferrule; Sleeve for 0.5 mm² / AWG 22; uninsulated; electro-tin plated; silver-colored



Item No.: 216-242
Ferrule; Sleeve for 0.75 mm² / 18 AWG; insulated; electro-tin plated; electrolytic copper; gastight crimped; acc. to DIN 46228, Part 4/09.90; gray



Item No.: 216-202
Ferrule; Sleeve for 0.75 mm² / 18 AWG; insulated; electro-tin plated; gray



Item No.: 216-142
Ferrule; Sleeve for 0.75 mm² / 18 AWG; uninsulated; electro-tin plated; electrolytic copper; gastight crimped; acc. to DIN 46228, Part 1/08.92



Item No.: 216-102
Ferrule; Sleeve for 0.75 mm² / 18 AWG; uninsulated; electro-tin plated; silver-colored


Continued on next page

### 1.1.2 Tool

#### 1.1.2.1 Operating tool



Item No.: 206-866
Operating tool; for 2061 Series



Item No.: 2061-190
Operating tool; made of insulating material

## Installation Notes

### Conductor termination

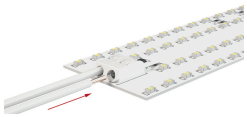

Inserting solid conductors via push-in termination.

### Conductor termination

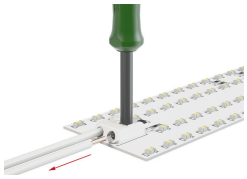

Easy conductor removal, e.g., via operating tool (206-861)