Data Sheet | Item Number: 2061-1623/998-404

THR PCB terminal block; push-button; 1.5 mm²; Pin spacing 6 mm; 3-pole; Push-in CAGE CLAMP®; in tape-and-reel packaging; black

https://www.wago.com/2061-1623/998-404





Color: ■ black





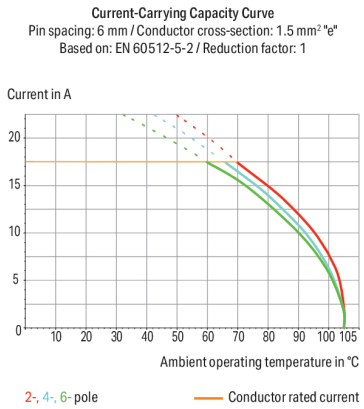

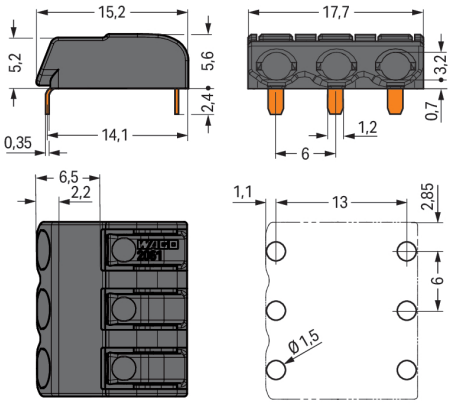

Dimensions in mm

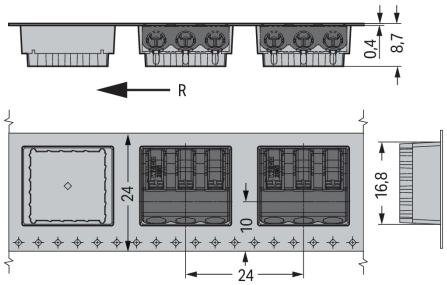

Dimensions in mm
R = feed direction

PCB terminal block, 2061 Series, black

Quick and easy connections are guaranteed with this PCB terminal block (item number 2061-1623/998-404). It is ideal for custom installations with different mounting types. Ensure that the strip lengths are between 7 and 10 mm when connecting conductors to this PCB terminal block. Featuring one conductor terminal along with Push-in CAGE CLAMP®, this product delivers reliable performance. Push-in CAGE CLAMP® connection technology is ideal for connecting all conductor types. Solid and fine-stranded conductors with ferrules can be plugged in without the need for tools—all thanks to its pluggable design. The item's dimensions are (17.7 x 8 x 15.2) mm (width x height x depth). Depending on the conductor type, this PCB terminal block is designed for conductor cross sections ranging from 0.25 mm² to 1.5 mm².

The contact surface is coated with tin. A push-button is used to operate this PCB terminal block. The PCB terminal block is designed for THR soldering. The conductor is designed to be inserted at an angle of 0°..

Notes

General safety information	**NOTICE: Observe installation and safety instructions!** **To be sold only with installation instructions!**
Note	Application notes: Suitable for lead-free, reflow-soldering profiles per DIN EN 61760-1 and IEC 60068-2-58 up to max. 260°C peak temperature. Due to application-specific variables (component configuration and orientation, type of soldering machine, solder paste), trial runs are recommended to ensure product and process compatibility under actual manufacturing conditions. Depending on reflow soldering temperatures and times, color deviations may occur. These deviations will have no impact on functionality.
Recommendation	Recommendation for stencil: 150 µm material thickness Stencil hole diameter identical to metal-plated PCB hole outer diameter

Electrical data

Ratings per	IEC/EN 60664-1		
Overvoltage category	III	III	II
Pollution degree	3	2	2
Nominal voltage	250 V	320 V	630 V
Rated impulse withstand voltage	4 kV	4 kV	4 kV
Rated current	17.5 A	17.5 A	17.5 A

Approvals per	UL 1059		
Use group	B	C	D
Rated voltage	300 V	-	300 V
Rated current	10 A	-	10 A

Connection Data

Clamping units	3
Total number of potentials	3
Number of connection types	1
Number of levels	1

Connection 1

Connection technology	Push-in CAGE CLAMP®
Actuation type	Push-button
Solid conductor	0.25 … 1.5 mm² / 20 … 16 AWG
Fine-stranded conductor	0.5 … 1.5 mm² / 20 … 16 AWG
Fine-stranded conductor; with insulated ferrule	0.5 … 0.75 mm²
Fine-stranded conductor; with uninsulated ferrule	0.5 … 0.75 mm²
Strip length	7 … 10 mm / 0.28 … 0.39 inches
Conductor connection direction to PCB	0 °
Pole number	3

Physical data

Pin spacing	6 mm / 0.24 inches
Width	17.7 mm / 0.697 inches
Height	8 mm / 0.315 inches
Height from the surface	5.6 mm / 0.22 inches
Depth	15.2 mm / 0.598 inches
Solder pin length	2.4 mm
Solder pin dimensions	1.2 x 0.35 mm
Plated through-hole diameter (THR)	1.5 $^{(+0.1)}$ mm
Reel diameter of tape-and-reel packaging	330 mm
Tape width	24 mm

PCB contact

PCB contact	THR
Solder pin arrangement	over the entire terminal strip (in-line)
Number of solder pins per potential	2

Material data

Note (material data)	Information on material specifications can be found here
Color	black
Material group	I
Insulation material (main housing)	Polyphthalamide (PPA GF)
Flammability class per UL94	V0
Contact material	Copper alloy
Contact Plating	Tin
Fire load	0.012 MJ
Weight	1.6 g
MSL per J-STD 020D	1

Continued on next page

Environmental requirements

Limit temperature range	-60 … +105 °C

Commercial data

PU (SPU)	2880 (320) pcs
Packaging type	Box
Country of origin	CN
GTIN	4055143907248
Customs tariff number	85369010000

Product Classification

UNSPSC	39121409
eCl@ss 10.0	27-14-11-06
eCl@ss 9.0	27-14-11-06
ETIM 9.0	EC001284
ETIM 10.0	EC001284
ECCN	NO US CLASSIFICATION

Environmental Product Compliance

RoHS Compliance Status	Compliant,No Exemption

Approvals / Certificates

General approvals

Approval	Standard	Certificate Name
CCA DEKRA Certification B.V.	EN 60947-7-4	NTR NL-7773
CCA DEKRA Certification B.V.	EN 60838	NTR NL-7721
cURus Underwriters Laboratories Inc.	UL 1059	E45172
KEMA/KEUR DEKRA Certification B.V.	EN 60947-7-4	71-110254
KEMA/KEUR DEKRA Certification B.V.	EN 60838	71-106232

Continued on next page

Downloads

Environmental Product Compliance

Compliance Search

Environmental Product Compliance
2061-1623/998-404

Documentation

Safety Data Sheet

Handling and Safety Instructions of PCB Terminal Blocks with Push-In Cage Clamp	pdf 393.90 KB	

Additional Information

Technical Section	03.04.2019	pdf 2027.26 KB
		pdf 535.32 KB

CAD/CAE-Data

CAD data

2D/3D Models
2061-1623/998-404

CAE data

ZUKEN Portal
2061-1623/998-404

PCB Design

Symbol and Footprint via SamacSys
2061-1623/998-404

Symbol and Footprint via Ultra Librarian
2061-1623/998-404

1 Compatible Products

1.1 Optional Accessories

1.1.1 Ferrule

1.1.1.1 Ferrule

Item No.: 216-201
Ferrule; Sleeve for 0.5 mm² / 20 AWG; insulated; electro-tin plated; electrolytic copper; acc. to DIN 46228, Part 4/09.90; white

Item No.: 216-241
Ferrule; Sleeve for 0.5 mm² / 20 AWG; insulated; electro-tin plated; electrolytic copper; gastight crimped; acc. to DIN 46228, Part 4/09.90; white

Item No.: 216-141
Ferrule; Sleeve for 0.5 mm² / 20 AWG; uninsulated; electro-tin plated; electrolytic copper; gastight crimped; acc. to DIN 46228, Part 1/08.92



Item No.: 216-101
Ferrule; Sleeve for 0.5 mm² / AWG 22; uninsulated; electro-tin plated; silver-colored

Item No.: 216-242
Ferrule; Sleeve for 0.75 mm² / 18 AWG; insulated; electro-tin plated; electrolytic copper; gastight crimped; acc. to DIN 46228, Part 4/09.90; gray

Item No.: 216-202
Ferrule; Sleeve for 0.75 mm² / 18 AWG; insulated; electro-tin plated; gray

Item No.: 216-142
Ferrule; Sleeve for 0.75 mm² / 18 AWG; uninsulated; electro-tin plated; electrolytic copper; gastight crimped; acc. to DIN 46228, Part 1/08.92



Item No.: 216-102
Ferrule; Sleeve for 0.75 mm² / 18 AWG; uninsulated; electro-tin plated; silver-colored

Continued on next page

1.1.2 Tool

1.1.2.1 Operating tool



Item No.: 206-866
Operating tool; for 2061 Series



Item No.: 2061-190
Operating tool; made of insulating material

Installation Notes

Conductor termination

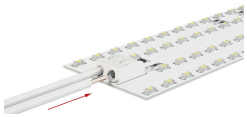

Inserting solid conductors via push-in termination.

Conductor termination

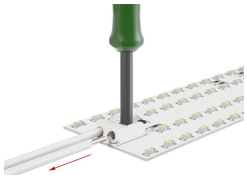

Easy conductor removal, e.g., via operating tool (206-861)