Data Sheet | Item Number: 2061-621/998-404

SMD PCB terminal block; push-button; 1.5 mm²; Pin spacing 6 mm; 1-pole; Push-in CAGE CLAMP®; in tape-and-reel packaging; black

https://www.wago.com/2061-621/998-404





Color: ■ black





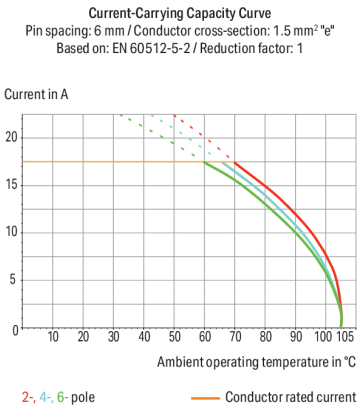

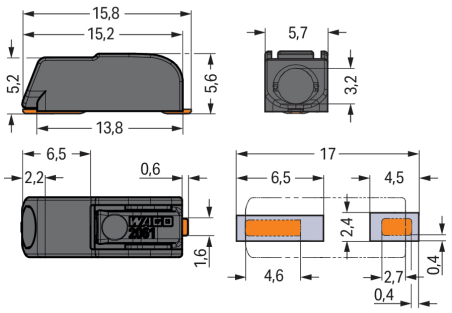

Dimensions in mm

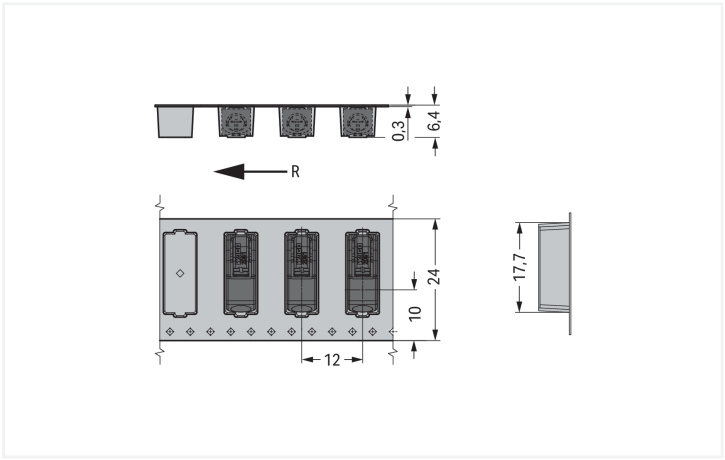

Dimensions in mm
R = feed direction

PCB terminal block, 2061 Series, 0 °conductor entry to board

Connect conductors quickly and easily with this PCB terminal block (item number 2061-621/998-404). It is ideal for custom installations with different mounting types. Ensure that the strip lengths are between 7 and 10 mm when connecting conductors to this PCB terminal block. This product features one conductor terminal and utilizes Push-in CAGE CLAMP®. Our Push-in CAGE CLAMP® is a universal, maintenance-free connection solution for all conductor types, featuring a winning design: It allows direct insertion of both solid and fine-stranded conductors with ferrules without needing tools. No preparation is required; for example, crimping the conductor's ferrule is not necessary. Dimensions: (5.7 x 5.6 x 15.8) mm (width x height x depth). This PCB terminal block is suitable for conductor cross sections ranging from 0.25 mm² to 1.5 mm².

The contact surface is coated with tin. This PCB terminal block is operated with a push-button. The PCB terminal block is designed for SMD soldering. Insert the conductor at an angle of 0°..

Notes

General safety information	**NOTICE: Observe installation and safety instructions!** **To be sold only with installation instructions!**
Note	Application notes: Suitable for lead-free, reflow-soldering profiles per DIN EN 61760-1 and IEC 60068-2-58 up to max. 260°C peak temperature. Due to application-specific variables (component configuration and orientation, type of soldering machine, solder paste), trial runs are recommended to ensure product and process compatibility under actual manufacturing conditions. Depending on reflow soldering temperatures and times, color deviations may occur. These deviations will have no impact on functionality.
Recommendation	Recommendation for stencil: 150 µm material thickness; Pattern layout identical to solder pad layout

Electrical data

Ratings per	IEC/EN 60664-1		
Overvoltage category	III	III	II
Pollution degree	3	2	2
Nominal voltage	250 V	320 V	630 V
Rated impulse withstand voltage	4 kV	4 kV	4 kV
Rated current	17.5 A	17.5 A	17.5 A

Approvals per	UL 1059		
Use group	B	C	D
Rated voltage	600 V	-	600 V
Rated current	10 A	-	5 A

Connection Data

Clamping units	1
Total number of potentials	1
Number of connection types	1
Number of levels	1

Connection 1

Connection technology	Push-in CAGE CLAMP®
Actuation type	Push-button
Solid conductor	0.25 … 1.5 mm² / 20 … 16 AWG
Fine-stranded conductor	0.5 … 1.5 mm² / 20 … 16 AWG
Fine-stranded conductor; with insulated ferrule	0.5 … 0.75 mm²
Fine-stranded conductor; with uninsulated ferrule	0.5 … 0.75 mm²
Strip length	7 … 10 mm / 0.28 … 0.39 inches
Conductor connection direction to PCB	0 °
Pole number	1

Physical data

Pin spacing	6 mm / 0.24 inches
Width	5.7 mm / 0.224 inches
Height	5.6 mm / 0.22 inches
Height from the surface	5.6 mm / 0.22 inches
Depth	15.8 mm / 0.622 inches
Reel diameter of tape-and-reel packaging	330 mm
Tape width	24 mm

PCB contact

PCB contact	SMD
Solder pin arrangement	over the entire terminal strip (in-line)
Number of solder pins per potential	2

Material data

Note (material data)	Information on material specifications can be found here
Color	black
Material group	I
Insulation material (main housing)	Polyphthalamide (PPA GF)
Flammability class per UL94	V0
Contact material	Copper alloy
Contact Plating	Tin
Fire load	0.004 MJ
Weight	0.9 g
MSL per J-STD 020D	1

Environmental requirements

Limit temperature range	-60 … +105 °C

Continued on next page

Commercial data

PU (SPU)	8100 (900) pcs
Packaging type	Box
Country of origin	CN
GTIN	4055143251129
Customs tariff number	85369010000

Product Classification

UNSPSC	39121409
eCl@ss 10.0	27-14-11-06
eCl@ss 9.0	27-14-11-06
ETIM 9.0	EC001284
ETIM 10.0	EC001284
ECCN	NO US CLASSIFICATION

Environmental Product Compliance

RoHS Compliance Status	Compliant,No Exemption

Approvals / Certificates

General approvals

Approval	Standard	Certificate Name
CCA DEKRA Certification B.V.	EN 60947-7-4	NTR NL-7773
CCA DEKRA Certification B.V.	EN 60838	NTR NL-7721
cURus Underwriters Laboratories Inc.	UL 1059	E45172
KEMA/KEUR DEKRA Certification B.V.	EN 60947-7-4	71-110254
KEMA/KEUR DEKRA Certification B.V.	EN 60838	71-106232

Downloads

Environmental Product Compliance

Compliance Search

Environmental Product Compliance 2061-621/998-404

Continued on next page

Documentation

Safety Data Sheet

Handling and Safety Instructions of PCB Terminal Blocks with Push-In Cage Clamp — pdf 393.90 KB

Additional Information

Technical Section — 03.04.2019 — pdf 2027.26 KB

CAD/CAE-Data

CAD data

2D/3D Models
2061-621/998-404

CAE data

ZUKEN Portal
2061-621/998-404

PCB Design

Symbol and Footprint via SamacSys
2061-621/998-404

Symbol and Footprint via Ultra Librarian
2061-621/998-404

1 Compatible Products

1.1 Optional Accessories

1.1.1 Board-to-board link

1.1.1.1 Board-to-board link



Item No.: 2061-901
Board-to-Board Link; Pin spacing 6 mm; 1-pole; Length: 30 mm; white



Item No.: 2061-901/034-000
Board-to-Board Link; Pin spacing 6 mm; 1-pole; Length: 34 mm; white

1.1.2 Ferrule

1.1.2.1 Ferrule

Item No.: 216-201
Ferrule; Sleeve for 0.5 mm² / 20 AWG; insulated; electro-tin plated; electrolytic copper; acc. to DIN 46228, Part 4/09.90; white

Item No.: 216-241
Ferrule; Sleeve for 0.5 mm² / 20 AWG; insulated; electro-tin plated; electrolytic copper; gastight crimped; acc. to DIN 46228, Part 4/09.90; white

Item No.: 216-141
Ferrule; Sleeve for 0.5 mm² / 20 AWG; uninsulated; electro-tin plated; electrolytic copper; gastight crimped; acc. to DIN 46228, Part 1/08.92



Item No.: 216-101
Ferrule; Sleeve for 0.5 mm² / AWG 22; uninsulated; electro-tin plated; silver-colored

Item No.: 216-242
Ferrule; Sleeve for 0.75 mm² / 18 AWG; insulated; electro-tin plated; electrolytic copper; gastight crimped; acc. to DIN 46228, Part 4/09.90; gray

Item No.: 216-202
Ferrule; Sleeve for 0.75 mm² / 18 AWG; insulated; electro-tin plated; gray

Item No.: 216-142
Ferrule; Sleeve for 0.75 mm² / 18 AWG; uninsulated; electro-tin plated; electrolytic copper; gastight crimped; acc. to DIN 46228, Part 1/08.92



Item No.: 216-102
Ferrule; Sleeve for 0.75 mm² / 18 AWG; uninsulated; electro-tin plated; silver-colored

Continued on next page

1.1.3 Tool

1.1.3.1 Operating tool



Item No.: 206-866
Operating tool; for 2061 Series



Item No.: 2061-190
Operating tool; made of insulating material

Installation Notes

Conductor termination

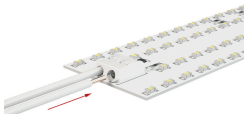

Inserting solid conductors via push-in termination.

Conductor termination

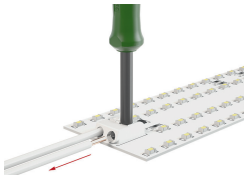

Easy conductor removal, e.g., via operating tool (206-861)