Data Sheet | Item Number: 2061-904/034-000

Board-to-Board Link; Pin spacing 6 mm; 4-pole; Length: 34 mm; white

https://www.wago.com/2061-904/034-000

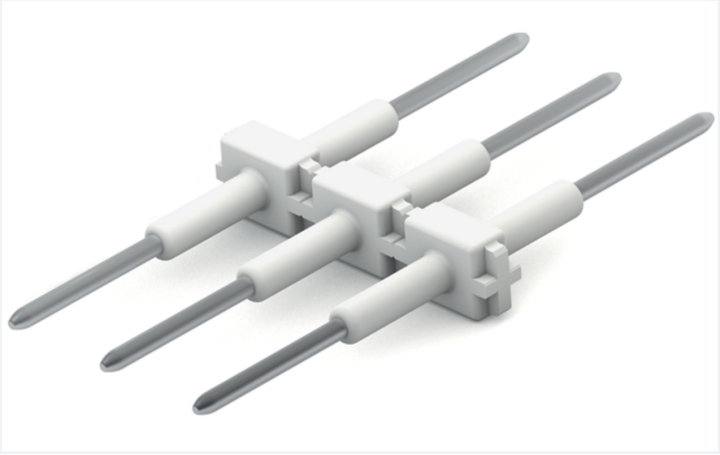

Color: white

Similar to illustration

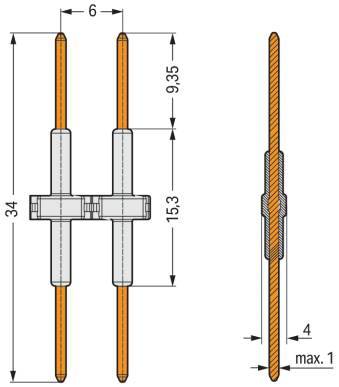

Dimensions in mm

- Board-to-board links simplify in-line assembly of LED modules
- Easy push-in connection and disconnection without push-button actuation

Electrical data

Ratings per	IEC/EN 60664-1		
Overvoltage category	III	III	II
Pollution degree	3	2	2
Nominal voltage	250 V	320 V	630 V
Rated impulse withstand voltage	4 kV	4 kV	4 kV
Rated current	9 A	9 A	9 A

Connection Data

Total number of potentials	4

Connection 1

Pole number	4

Physical data

Pin spacing	6 mm / 0.236 inches
Width	23.7 mm / 0.933 inches
Height	2.5 mm / 0.098 inches
Depth	34 mm / 1.339 inches

Continued on next page

Mechanical data

Mating cycles (max.)	10
Number of mating cycles	10 connections/disconnections (max.)
Suitable	for SMD PCB terminal blocks (2061 Series)

Material data

Note (material data)	Information on material specifications can be found here
Color	white
Material group	I
Insulation material (main housing)	Polyamide (PA66)
Flammability class per UL94	V0
Contact material	Copper alloy
Contact Plating	Silver
Fire load	0.013 MJ
Weight	1.4 g

Environmental requirements

Limit temperature range	-60 … +105 °C

Commercial data

PU (SPU)	100 pcs
Packaging type	Box
Country of origin	CN
GTIN	4055143656757
Customs tariff number	85369010000

Product Classification

UNSPSC	39121409
eCl@ss 10.0	27-14-11-92
eCl@ss 9.0	27-14-11-92
ETIM 9.0	EC002848
ETIM 10.0	EC002848
ECCN	NO US CLASSIFICATION

Environmental Product Compliance

RoHS Compliance Status	Compliant,No Exemption

Approvals / Certificates

General approvals

Approval	Standard	Certificate Name
CCA DEKRA Certification B.V.	EN 60838	NTR NL-7721
cURus Underwriters Laboratories Inc.	UL 1059	E45172
KEMA/KEUR DEKRA Certification B.V.	EN 60947-7-4	71-110254

General approvals

KEMA/KEUR DEKRA Certification B.V.	EN 60838	71-106232

Continued on next page

Downloads

Environmental Product Compliance

Compliance Search

Environmental Product Compliance
2061-904/034-000

Documentation

Additional Information

Technical Section	03.04.2019	pdf 2027.26 KB

CAD/CAE-Data

CAD data

2D/3D Models
2061-904/034-000

CAE data

ZUKEN Portal
2061-904/034-000

Installation Notes

Installation

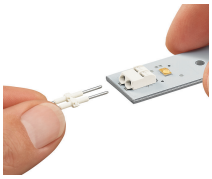

Inserting a board-to-board link into the terminal block.

Installation

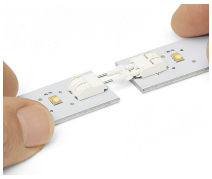

Assembly: Place PCBs on a flat surface and connect terminal blocks on adjoining PCBs via board-to-board link.
Disassembly: Pull PCBs apart (max. 10 mating cycles).

Installation

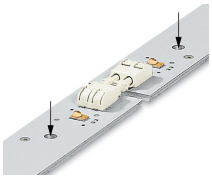

The PCBs must be secured.