Data Sheet | Item Number: 2091-1326/200-000

THR female header; angled; Pin spacing 3.5 mm; 6-pole; 0.4 x 0.9 mm solder pin; light gray

https://www.wago.com/2091-1326/200-000





Color: light gray



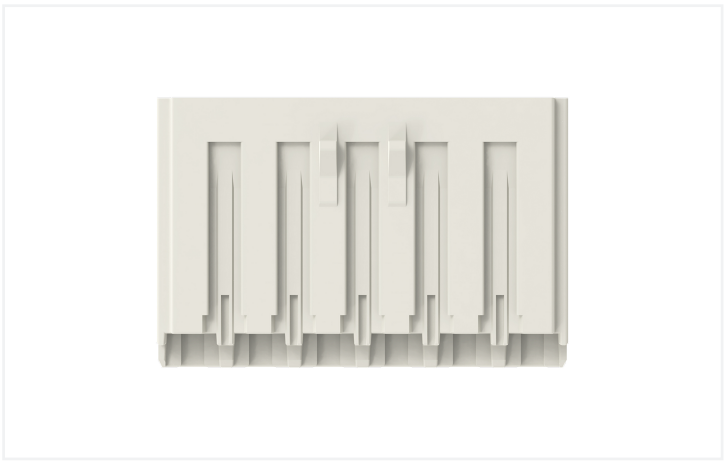

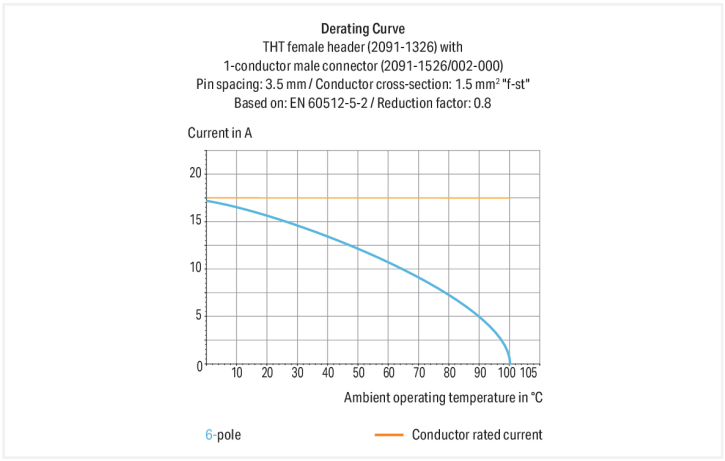

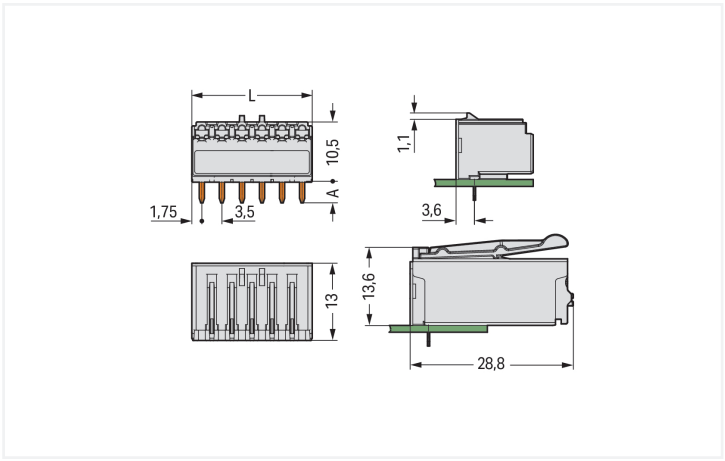

Dimensions in mm
L = pole no. x pin spacingA = 3.6 mm THT solder pinA = 2.4 mm THR solder pin

Female connector, 2091 Series, with 3.5 mm pin spacing

This female connector (item number 2091-1326/200-000) provides hassle-free electrical installations. The dimensions are (21 x 14 x 13) mm (width x height x depth).

Tin is used for coating the contact surfaces. THR is used to assemble the pcb connector.

Notes

Safety Information	The **picoMAX® Pluggable Connection System** includes connectors without breaking capacity in accordance with DIN EN 61984. When used as intended, these connectors must not be connected/disconnected when live or under load.When used as intended, these connectors must not be connected/disconnected when live or under load. The circuit design should ensure header pins, which can be touched, are not live when unmated.

Electrical data

Ratings per	IEC/EN 60664-1		
Overvoltage category	III	III	II
Pollution degree	3	2	2
Nominal voltage	160 V	160 V	320 V
Rated impulse withstand voltage	2.5 kV	2.5 kV	2.5 kV
Rated current	10 A	10 A	10 A

Approvals per	UL 1059		
Use group	B	C	D
Rated voltage	300 V	-	300 V
Rated current	10 A	-	10 A

Connection Data

Clamping units	6
Total number of potentials	6
Number of connection types	1
Number of levels	1

Connection 1

Pole number	6

Physical data

Pin spacing	3.5 mm / 0.138 inches
Width	21 mm / 0.827 inches
Height	14 mm / 0.551 inches
Height from the surface	11.6 mm / 0.457 inches
Depth	13 mm / 0.512 inches
Solder pin length	2.4 mm
Solder pin dimensions	0.4 x 0.9 mm
Plated through-hole diameter (THR)	1.1 $^{(+0.1)}$ mm

Mechanical data

Variable coding	Yes
Anti-rotation protection	Yes

Plug-in connection

Contact type (pluggable connector)	Female connector/socket
Connector (connection type)	for PCB
Mismating protection	No
Plugging without loss of pin spacing	Yes
Mating direction to the PCB	0 °

Continued on next page

PCB contact

PCB contact	THR

Material data

Note (material data)	Information on material specifications can be found here
Color	light gray
Material group	I
Insulation material (main housing)	Polyphthalamide (PPA GF)
Flammability class per UL94	V0
Contact material	Copper alloy
Contact Plating	Tin
Fire load	0.035 MJ
Weight	3.2 g
MSL per J-STD 020D	1

Environmental requirements

Limit temperature range	-60 … +100 °C
Processing temperature	-35 … +60 °C

Commercial data

PU (SPU)	100 pcs
Packaging type	Box
Country of origin	DE
GTIN	4050821395997
Customs tariff number	85366990990

Product Classification

UNSPSC	39121409
eCl@ss 10.0	27-44-04-02
eCl@ss 9.0	27-44-04-02
ETIM 9.0	EC002637
ETIM 10.0	EC002637
ECCN	NO US CLASSIFICATION

Environmental Product Compliance

RoHS Compliance Status	Compliant,No Exemption

Approvals / Certificates

General approvals

Approval	Standard	Certificate Name
CB DEKRA Certification B.V.	IEC 61984	NL-89884
CSA CSA Group	C22.2	2362521
KEMA/KEUR DEKRA Certification B.V.	EN 61984	71-129873

General approvals

UR Underwriters Laboratories Inc.	UL 1059	E45172

Continued on next page

Downloads

Environmental Product Compliance

Compliance Search

Environmental Product Compliance
2091-1326/200-000

Documentation

Additional Information

Technical Section	03.04.2019	pdf 2027.26 KB
		pdf 611.20 KB

CAD/CAE-Data

CAD data

2D/3D Models
2091-1326/200-000

CAE data

ZUKEN Portal
2091-1326/200-000

PCB Design

Symbol and Footprint via SamacSys
2091-1326/200-000

Symbol and Footprint via Ultra Librarian
2091-1326/200-000

1 Compatible Products

1.1 System counterpart

1.1.1 Male connector/plug



Item No.: 2091-1526/002-000
1-conductor male connector; Push-in CAGE CLAMP®; 1.5 mm²; Pin spacing 3.5 mm; 6-pole; Integrated release lever; 1,50 mm²; light gray

 Continued on next page

1.2 Optional Accessories

1.2.1 Coding

1.2.1.1 Coding



Item No.: 2091-1610
Coding key carrier; suitable for 3.5 mm pin spacing; orange