Data Sheet | Item Number: 2091-1428/205-000

THR male header; 1.0 mm Ø solder pin; angled; clamping collar; Pin spacing 3.5 mm; 8-pole; light gray

https://www.wago.com/2091-1428/205-000

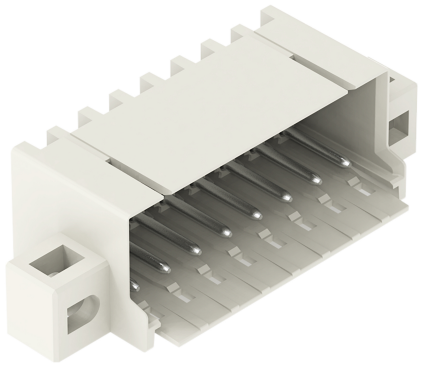

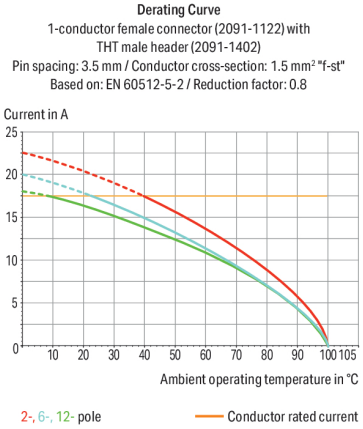

Color: light gray

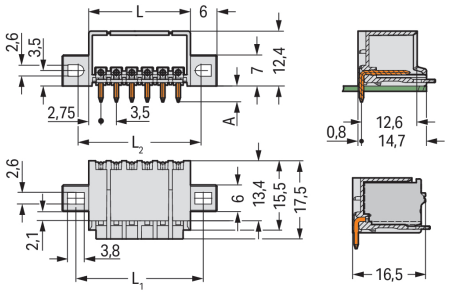

Dimensions in mm
L = (pole no. x pin spacing) + 2 mmL1 = (pole no. x pin spacing) + 7.8 mmL2 = (pole no. x pin spacing) + 6.8 mmA = 3.6 mm THT solder pinA = 2.4 mm THR solder pin

Male connector, 2091 Series, light gray

This male connector (item number 2091-1428/205-000) simplifies electrical installations. The dimensions are (42 x 14.8 x 17.5) mm (width x height x depth).

The contact surface is coated with tin. THR is used to solder the pcb connector.

Notes

Safety Information	The **picoMAX® Pluggable Connection System** includes connectors without breaking capacity in accordance with DIN EN 61984. When used as intended, these connectors must not be connected/disconnected when live or under load.When used as intended, these connectors must not be connected/disconnected when live or under load. The circuit design should ensure header pins, which can be touched, are not live when unmated.
Variants:	Direct marking Tape-and-reel packaging Other versions (or variants) can be requested from WAGO Sales or configured at https://configurator.wago.com/.

Electrical data

Ratings per	IEC/EN 60664-1		
Overvoltage category	III	III	II
Pollution degree	3	2	2
Nominal voltage	160 V	160 V	320 V
Rated impulse withstand voltage	2.5 kV	2.5 kV	2.5 kV
Rated current	10 A	10 A	10 A

Approvals per	UL 1059		
Use group	B	C	D
Rated voltage	300 V	-	300 V
Rated current	10 A	-	10 A

Connection Data

Total number of potentials	8
Number of connection types	1
Number of levels	1

Connection 1

Pole number	8

Physical data

Pin spacing	3.5 mm / 0.138 inches
Width	42 mm / 1.654 inches
Height	14.8 mm / 0.583 inches
Height from the surface	12.4 mm / 0.488 inches
Depth	17.5 mm / 0.689 inches
Solder pin length	2.4 mm
Solder pin diameter	1 mm
Plated through-hole diameter (THR)	1.2 $^{(+0.1)}$ mm

Mechanical data

Variable coding	Yes
Mounting type	Mounting flange
Mounting type	Feed-through mounting Panel mounting
Anti-rotation protection	Yes
Suitable for through-panel applications	Yes

Continued on next page

Plug-in connection

Contact type (pluggable connector)	Male connector/plug
Connector (connection type)	for PCB
Mismating protection	No
Plugging without loss of pin spacing	Yes
Mating direction to the PCB	0 °
Locking of plug-in connection	Locking latch

PCB contact

PCB contact	THR

Material data

Note (material data)	Information on material specifications can be found here
Color	light gray
Material group	I
Insulation material (main housing)	Polyphthalamide (PPA GF)
Flammability class per UL94	V0
Contact material	Electrolytic copper (E_{Cu})
Contact Plating	Tin
Fire load	0.034 MJ
Weight	3.2 g
MSL per J-STD 020D	1

Environmental requirements

Limit temperature range	-60 … +100 °C
Processing temperature	-35 … +60 °C

Commercial data

PU (SPU)	100 pcs
Packaging type	Box
Country of origin	DE
GTIN	4050821412052
Customs tariff number	85366930000

Product Classification

UNSPSC	39121409
eCl@ss 10.0	27-44-04-02
eCl@ss 9.0	27-44-04-02
ETIM 9.0	EC002637
ETIM 10.0	EC002637
ECCN	NO US CLASSIFICATION

Continued on next page

Environmental Product Compliance

RoHS Compliance Status	Compliant,No Exemption

Approvals / Certificates

General approvals

Approval	Standard	Certificate Name
CB DEKRA Certification B.V.	IEC 61984	NL-89884
CSA CSA Group	C22.2	2362521
KEMA/KEUR DEKRA Certification B.V.	EN 61984	71-129873
UR Underwriters Laboratories Inc.	UL 1059	E45172

Downloads

Environmental Product Compliance

Compliance Search

Environmental Product Compliance
2091-1428/205-000

Documentation

Additional Information

Technical Section	03.04.2019	pdf 2027.26 KB	
		pdf 611.20 KB	

CAD/CAE-Data

CAD data

2D/3D Models
2091-1428/205-000

Continued on next page

1 Compatible Products

1.1 System counterpart

1.1.1 Female connector/socket



Item No.: 2091-1128
1-conductor female connector; push-button; Push-in CAGE CLAMP®; 1.5 mm²; Pin spacing 3.5 mm; 8-pole; 1,50 mm²; light gray

1.2 Optional Accessories

1.2.1 Coding

1.2.1.1 Coding



Item No.: 2091-1610
Coding key carrier; suitable for 3.5 mm pin spacing; orange

Installation Notes

Coding



Coding a male header (via coding key carrier and two keys for male header, see symbol).