Data Sheet | Item Number: 2091-1712

THT pin strip; 1.0 mm Ø solder pin; straight; Pin spacing 3.5 mm; 12-pole; black

https://www.wago.com/2091-1712



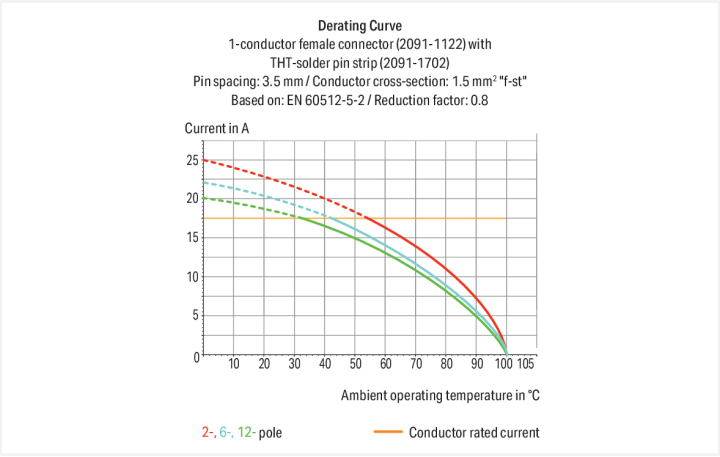

Color: ■ black

Similar to illustration

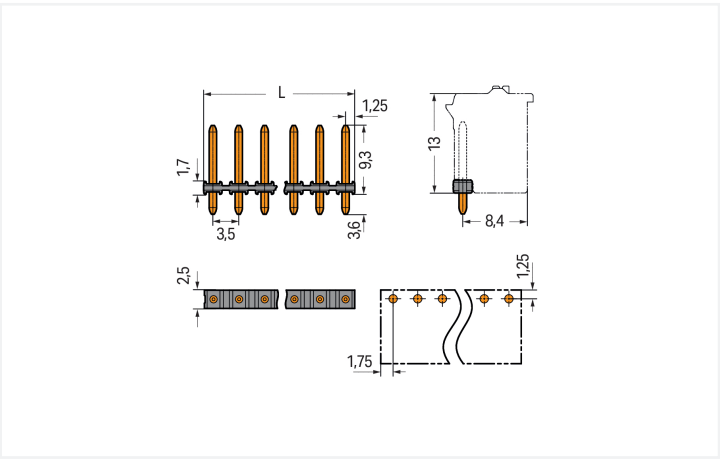

L = (pole no. – 1) x pin spacing + 2.5 mm

Male connector, 2091 Series, with 3.5 mm pin spacing

Our male connector (item number 2091-1712) is designed for seamless electrical installations. Dimensions: (43.5 x 12.9 x 2.5) mm (width x height x depth).

Tin is used for coating the contact surfaces. The pcb connector is designed for THT soldering.

Notes

Safety Information	The **picoMAX® Pluggable Connection System** includes connectors without breaking capacity in accordance with DIN EN 61984. When used as intended, these connectors must not be connected/disconnected when live or under load.When used as intended, these connectors must not be connected/disconnected when live or under load. The circuit design should ensure header pins, which can be touched, are not live when unmated.

Electrical data

Ratings per	IEC/EN 60664-1		
Overvoltage category	III	III	II
Pollution degree	3	2	2
Nominal voltage	160 V	160 V	320 V
Rated impulse withstand voltage	2.5 kV	2.5 kV	2.5 kV
Rated current	10 A	10 A	10 A

Connection Data

Number of connection types	1
Number of levels	1

Connection 1

Pole number	12

Physical data

Pin spacing	3.5 mm / 0.138 inches
Width	43.5 mm / 1.713 inches
Height	12.9 mm / 0.508 inches
Height from the surface	9.3 mm / 0.366 inches
Depth	2.5 mm / 0.098 inches
Solder pin length	3.6 mm
Solder pin diameter	1 mm
Drilled hole diameter	1.2 $^{(+0.1)}$ mm

Mechanical data

Variable coding	Yes
Anti-rotation protection	Yes

Plug-in connection

Contact type (pluggable connector)	Male connector/plug
Connector (connection type)	for PCB
Mismating protection	No
Plugging without loss of pin spacing	Yes
Mating direction to the PCB	90 °

PCB contact

PCB contact	THT

Material data

Note (material data)	Information on material specifications can be found here
Color	black
Material group	I
Insulation material (main housing)	Polyphthalamide (PPA GF)
Flammability class per UL94	V0
Contact material	Electrolytic copper (E_{Cu})
Contact Plating	Tin
Weight	1.2 g

Continued on next page

Environmental requirements

Limit temperature range	-60 … +100 °C

Commercial data

PU (SPU)	400 pcs
Packaging type	Bag
Country of origin	CN
GTIN	4055143934770
Customs tariff number	85366930000

Product Classification

UNSPSC	39121409
ETIM 9.0	EC002637
ETIM 10.0	EC002637
ECCN	NO US CLASSIFICATION

Environmental Product Compliance

RoHS Compliance Status	Compliant,No Exemption

Approvals / Certificates

General approvals

Approval	Standard	Certificate Name
CB DEKRA Certification B.V.	IEC 61984	NL-89884
CSA CSA Group	C22.2	2362521
KEMA/KEUR DEKRA Certification B.V.	EN 61984	71-129873
UL Underwriters Laboratories Inc.	UL 1059	E45172
UL Underwriters Laboratories Inc.	UL 1977	E45171

Downloads

Environmental Product Compliance

Compliance Search

Environmental Product Compliance 2091-1712

Continued on next page

Documentation

Additional Information

Technical Section	03.04.2019	pdf 2027.26 KB

CAD/CAE-Data

CAD data

2D/3D Models
2091-1712

CAE data

ZUKEN Portal 2091-1712