Data Sheet | Item Number: 2092-1175

1-conductor THT female connector straight; push-button; Push-in CAGE CLAMP®; 2.5 mm²; Pin spacing 5 mm; 5-pole; 1.4 mm Ø solder pin; 2,50 mm²; light gray

https://www.wago.com/2092-1175



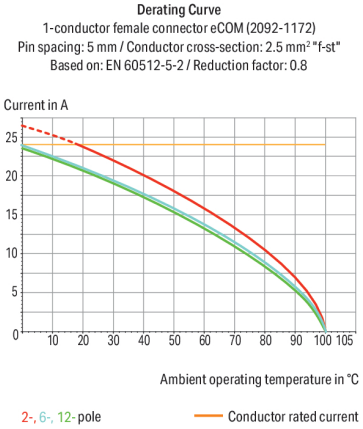

Color: light gray

Similar to illustration

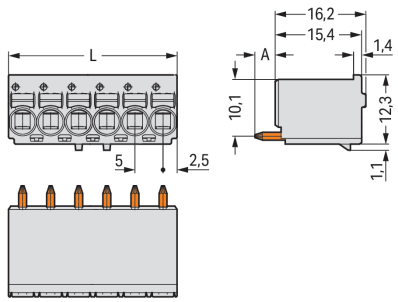

Dimensions in mm
L = pole no. x pin spacingA = 3.6 mm THT solder pinA = 2.4 mm THR solder pin

Female connector, 2092 Series, push-button

Seamless electrical installations are guaranteed with this female connector (item number 2092-1175). Conductors can only be connected to this female connector if their strip length is between 9 and 10 mm . Featuring one conductor terminal along with Push-in CAGE CLAMP®, this product is highly versatile. Our Push-in CAGE CLAMP® is a universal, maintenance-free connection solution for all conductor types, boasting a key feature: It allows direct insertion of both solid and fine-stranded conductors with ferrules without needing tools. No preparation is required; for example, crimping the conductor's ferrule is not necessary. The item's dimensions are (25 x 16.2 x 13.4) mm (width x height x depth). Depending on the conductor type, this female connector is ideal for conductor cross sections ranging from 0.2 mm² to 2.5 mm².

Tin is used for coating the contact surfaces. The PCB connector is designed for THT soldering.

- Ready to install, immediately usable
- Reliable soldering thanks to THT
- The right solution for every wiring task
- Actuation via push-button
- Pin spacing: 5 mm

Notes

Safety Information	The **picoMAX® Pluggable Connection System** includes connectors without breaking capacity in accordance with DIN EN 61984. When used as intended, these connectors must not be connected/disconnected when live or under load.When used as intended, these connectors must not be connected/disconnected when live or under load. The circuit design should ensure header pins, which can be touched, are not live when unmated.
Safety information 2	The use of ferrules is recommended for applications with higher requirements. To prevent excessive force on the clamping point, effective cable strain relief must be used.

Electrical data

Ratings per	IEC/EN 60664-1		
Overvoltage category	III	III	II
Pollution degree	3	2	2
Nominal voltage	250 V	320 V	630 V
Rated impulse withstand voltage	4 kV	4 kV	4 kV
Rated current	16 A	16 A	16 A

Approvals per	UL 1059		
Use group	B	C	D
Rated voltage	300 V	-	300 V
Rated current	15 A	-	10 A

Connection Data

Clamping units	5
Total number of potentials	5
Number of connection types	1
Number of levels	1

Connection 1

Connection technology	Push-in CAGE CLAMP®
Actuation type	Push-button
Actuation direction 1	Operation parallel to conductor entry
Solid conductor	0.2 … 2.5 mm² / 24 … 12 AWG
Fine-stranded conductor	0.2 … 2.5 mm² / 24 … 12 AWG
Fine-stranded conductor; with insulated ferrule	0.25 … 1.5 mm²
Fine-stranded conductor; with uninsulated ferrule	0.25 … 2.5 mm²
Strip length	9 … 10 mm / 0.35 … 0.39 inches
Conductor connection direction to PCB	90 °
Pole number	5

Physical data

Pin spacing	5 mm / 0.197 inches
Width	25 mm / 0.984 inches
Height	16.2 mm / 0.638 inches
Depth	13.4 mm / 0.528 inches
Solder pin length	3.6 mm
Solder pin diameter	1.4 mm
Drilled hole diameter	1.6 $^{(+0.1)}$ mm

Mechanical data

Variable coding	No
Anti-rotation protection	Yes

Continued on next page

Plug-in connection

Contact type (pluggable connector)	Female connector/socket
Connector (connection type)	for PCB
Mismating protection	No
Plugging without loss of pin spacing	Yes
Mating direction to the PCB	90 °

PCB contact

PCB contact	THT

Material data

Note (material data)	Information on material specifications can be found here
Color	light gray
Material group	I
Insulation material (main housing)	Polyphthalamide (PPA GF)
Flammability class per UL94	V0
Clamping spring material	Chrome-nickel spring steel (CrNi)
Contact material	Electrolytic copper (E_{Cu})
Contact Plating	Tin
Fire load	0.051 MJ
Weight	5.5 g

Environmental requirements

Limit temperature range	-60 … +100 °C
Processing temperature	-35 … +60 °C

Commercial data

Product Group	26 (picoMAX Connectors)
PU (SPU)	200 pcs
Packaging type	Box
Country of origin	DE
GTIN	4050821165132
Customs tariff number	85366990990

Product Classification

UNSPSC	39121409
eCl@ss 10.0	27-44-04-02
eCl@ss 9.0	27-44-04-02
ETIM 9.0	EC002637
ETIM 10.0	EC002637
ECCN	NO US CLASSIFICATION

Continued on next page

Environmental Product Compliance

RoHS Compliance Status	Compliant,No Exemption

Approvals / Certificates

General approvals

Approval	Standard	Certificate Name
CB DEKRA Certification B.V.	IEC 61984	NL-89885
CSA CSA Group	C22.2	2362521
CSA DEKRA Certification B.V.	C22.2 No. 158	2362521
cURus Underwriters Laboratories Inc.	UL 1059	E45172
KEMA/KEUR DEKRA Certification B.V.	EN 61984	71-129874
UL Underwriters Laboratories Inc.	UL 1977	E45171

Downloads

Environmental Product Compliance

Compliance Search

Environmental Product Compliance 2092-1175

Documentation

Additional Information

Technical Section	03.04.2019	pdf 2027.26 KB

CAD/CAE-Data

CAD data

2D/3D Models 2092-1175

CAE data

ZUKEN Portal 2092-1175

PCB Design
Symbol and Footprint via SamacSys 2092-1175
Symbol and Footprint via Ultra Librarian 2092-1175

1 Compatible Products

1.1 Optional Accessories

1.1.1 Ferrule

1.1.1.1 Ferrule



Item No.: 216-301
Ferrule; Sleeve for 0.25 mm² / AWG 24; insulated; electro-tin plated; yellow

Item No.: 216-131
Ferrule; Sleeve for 0.25 mm² / AWG 24; uninsulated; electro-tin plated; silver-colored

Item No.: 216-302
Ferrule; Sleeve for 0.34 mm² / 22 AWG; insulated; electro-tin plated; light turquoise

Item No.: 216-132
Ferrule; Sleeve for 0.34 mm² / 22 AWG; uninsulated; electro-tin plated



Item No.: 216-101
Ferrule; Sleeve for 0.5 mm² / AWG 22; uninsulated; electro-tin plated; silver-colored

Item No.: 216-202
Ferrule; Sleeve for 0.75 mm² / 18 AWG; insulated; electro-tin plated; gray



Item No.: 216-102
Ferrule; Sleeve for 0.75 mm² / 18 AWG; uninsulated; electro-tin plated; silver-colored



Item No.: 216-122
Ferrule; Sleeve for 0.75 mm² / 18 AWG; uninsulated; electro-tin plated; silver-colored

Item No.: 216-203
Ferrule; Sleeve for 1 mm² / AWG 18; insulated; electro-tin plated; red



Item No.: 216-103
Ferrule; Sleeve for 1 mm² / AWG 18; uninsulated; electro-tin plated

Item No.: 216-143
Ferrule; Sleeve for 1 mm² / AWG 18; uninsulated; electro-tin plated; electrolytic copper; gastight crimped; acc. to DIN 46228, Part 1/08.92



Item No.: 216-204
Ferrule; Sleeve for 1.5 mm² / AWG 16; insulated; electro-tin plated; black

Item No.: 216-144
Ferrule; Sleeve for 1.5 mm² / AWG 16; uninsulated; electro-tin plated; electrolytic copper; gastight crimped; acc. to DIN 46228, Part 1/08.92; silver-colored



Item No.: 216-104
Ferrule; Sleeve for 1.5 mm² / AWG 16; uninsulated; electro-tin plated; silver-colored



Item No.: 216-106
Ferrule; Sleeve for 2.5 mm² / AWG 14; uninsulated; electro-tin plated; silver-colored

1.1.2 Test and measurement

1.1.2.1 Testing accessories



Item No.: 735-500
WAGO Test pin; 1 mm Ø; 30 V AC / 60 V DC; CAT0; 1 A; 6 mm uninsulated; Test lead for soldering up to 0,5mm²

Continued on next page

1.1.3 Tool

1.1.3.1 Operating tool



Item No.: 210-719
Operating tool; Blade: 2.5 x 0.4 mm; with a partially insulated shaft

Installation Notes

Conductor termination

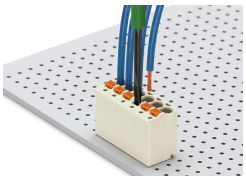

Terminating fine-stranded conductors and removing all conductor types via push-buttons.

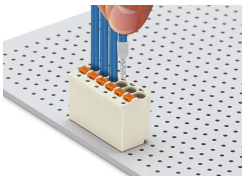

Solid and ferruled conductors are terminated by simply pushing them into unit.

Marking



Pole marking via direct marking perpendicular to conductor entry.



Pole marking via factory direct marking.

Testing



Testing via 1 mm Ø test pin – touch contact.