Data Sheet | Item Number: 2092-1325

THT female header; angled; Pin spacing 5 mm; 5-pole; 0.4 x 1.3 mm solder pin; light gray

https://www.wago.com/2092-1325



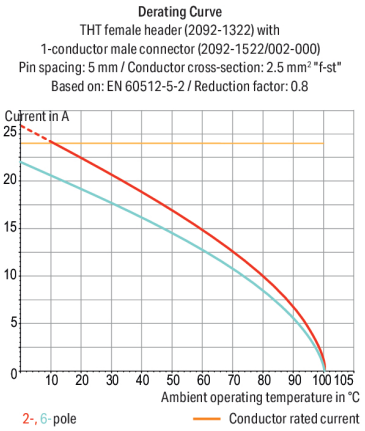

Color: light gray

Similar to illustration

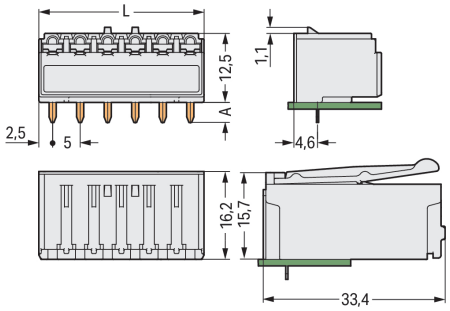

Dimensions in mm
L = pole no. x pin spacingA = 3.6 mm THT solder pinA = 2.4 mm THR solder pin

Female connector, 2092 Series, light gray

Enjoy convenient electrical installations with this female connector (item number 2092-1325). The dimensions are (25 x 17.2 x 15.4) mm (width x height x depth).

The contact surface is coated with tin. The pcb connector is designed for THT soldering.

Notes

Safety Information	The **picoMAX® Pluggable Connection System** includes connectors without breaking capacity in accordance with DIN EN 61984. When used as intended, these connectors must not be connected/disconnected when live or under load.When used as intended, these connectors must not be connected/disconnected when live or under load. The circuit design should ensure header pins, which can be touched, are not live when unmated.

Electrical data

Ratings per	IEC/EN 60664-1		
Overvoltage category	III	III	II
Pollution degree	3	2	2
Nominal voltage	250 V	320 V	630 V
Rated impulse withstand voltage	4 kV	4 kV	4 kV
Rated current	16 A	16 A	16 A

Approvals per	UL 1059		
Use group	B	C	D
Rated voltage	300 V	-	300 V
Rated current	15 A	-	10 A

Connection Data

Clamping units	5
Total number of potentials	5
Number of connection types	1
Number of levels	1

Connection 1

Pole number	5

Physical data

Pin spacing	5 mm / 0.197 inches
Width	25 mm / 0.984 inches
Height	17.2 mm / 0.677 inches
Height from the surface	13.6 mm / 0.535 inches
Depth	15.4 mm / 0.606 inches
Solder pin length	3.6 mm
Solder pin dimensions	0.4 x 1.3 mm
Drilled hole diameter	1.5 $^{(+0.1)}$ mm

Mechanical data

Variable coding	Yes
Anti-rotation protection	Yes

Plug-in connection

Contact type (pluggable connector)	Female connector/socket
Connector (connection type)	for PCB
Mismating protection	No
Plugging without loss of pin spacing	Yes
Mating direction to the PCB	0 °

PCB contact

PCB contact	THT

Material data

Note (material data)	Information on material specifications can be found here
Color	light gray
Material group	I
Insulation material (main housing)	Polyphthalamide (PPA GF)
Flammability class per UL94	V0
Contact material	Copper alloy
Contact Plating	Tin
Fire load	0.054 MJ
Weight	4.9 g

Continued on next page

Environmental requirements

Limit temperature range	-60 … +100 °C
Processing temperature	-35 … +60 °C

Commercial data

Product Group	26 (picoMAX Connectors)
PU (SPU)	100 pcs
Packaging type	Box
Country of origin	DE
GTIN	4050821163718
Customs tariff number	85366990990

Product Classification

UNSPSC	39121409
eCl@ss 10.0	27-44-04-02
eCl@ss 9.0	27-44-04-02
ETIM 9.0	EC002637
ETIM 10.0	EC002637
ECCN	NO US CLASSIFICATION

Environmental Product Compliance

RoHS Compliance Status	Compliant,No Exemption

Approvals / Certificates

General approvals

Approval	Standard	Certificate Name
CB DEKRA Certification B.V.	IEC 61984	NL-89885
CSA CSA Group	C22.2	2362521
CSA DEKRA Certification B.V.	C22.2 No. 158	2362521
cURus Underwriters Laboratories Inc.	UL 1059	E45172
KEMA/KEUR DEKRA Certification B.V.	EN 61984	71-129874
UL Underwriters Laboratories Inc.	UL 1977	E45171

Continued on next page

Downloads

Environmental Product Compliance

Compliance Search

Environmental Product Compliance 2092-1325

Documentation

Additional Information

Technical Section	03.04.2019	pdf 2027.26 KB

CAD/CAE-Data

CAD data

2D/3D Models 2092-1325

CAE data

ZUKEN Portal 2092-1325

PCB Design

Symbol and Footprint via SamacSys 2092-1325

Symbol and Footprint via Ultra Librarian 2092-1325

1 Compatible Products

1.1 System counterpart

1.1.1 Male connector/plug



Item No.: 2092-1525/020-000
1-conductor male connector; Push-in CAGE CLAMP®; 2.5 mm²; Pin spacing 5 mm; 5-pole; DIN-35 rail/panel mounting; Snap-in mounting feet; Integrated release lever; 2,50 mm²; light gray



Item No.: 2092-1505/002-000
1-conductor male connector; Push-in CAGE CLAMP®; 2.5 mm²; Pin spacing 5 mm; 5-pole; Gripping plate; 2,50 mm²; light gray



Item No.: 2092-1525/002-000
1-conductor male connector; Push-in CAGE CLAMP®; 2.5 mm²; Pin spacing 5 mm; 5-pole; Integrated release lever; 2,50 mm²; light gray

Continued on next page

1.2 Optional Accessories

1.2.1 Coding

1.2.1.1 Coding



Item No.: 2092-1610
Coding key carrier; orange