Data Sheet | Item Number: 215-212

Banana plug; for socket 4 mm Ø; 2,50 mm²; red

https://www.wago.com/215-212

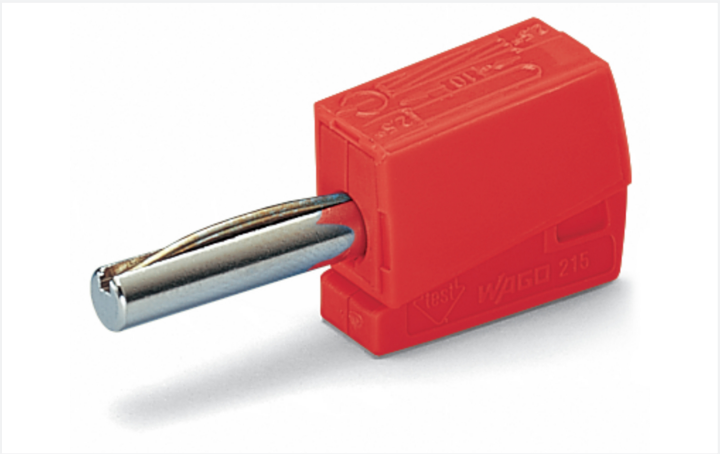



Color: red

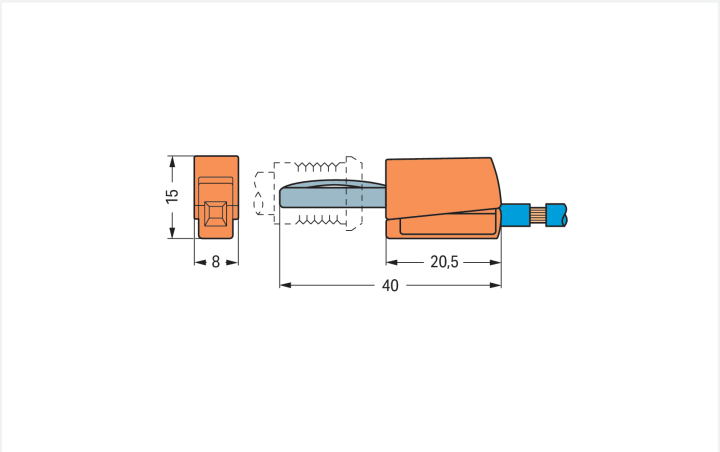

Dimensions in mm

Technical data

Total number of potentials	1

Electrical data

Rated current	20 A
Test voltage	42 V

Connection Data

Connection technology	CAGE CLAMP®
Strip length	9 … 11 mm / 0.35 … 0.43 inches
Clamping units	1
Solid conductor	0.08 … 2.5 mm² / 28 … 14 AWG
Fine-stranded conductor	0.08 … 2.5 mm² / 28 … 14 AWG

Physical data

Width	8 mm / 0.315 inches
Height	15 mm / 0.591 inches
Depth	40 mm / 1.575 inches

Material data

Color	red
Fire load	0.037 MJ
Weight	3.9 g

Commercial data

Product Group	2 (Terminal Block Accessories)
PU (SPU)	50 pcs
Packaging type	Box
Country of origin	DE
GTIN	4045454293482
Customs tariff number	85366990990

Product Classification

UNSPSC	39121421
eCl@ss 10.0	27-44-03-13
eCl@ss 9.0	27-44-03-13
ETIM 9.0	EC002255
ETIM 10.0	EC002255
ECCN	NO US CLASSIFICATION

Environmental Product Compliance

CAS-No.	7439-92-1
REACH Candidate List Substance	Lead
RoHS Compliance Status	Compliant,With Exemption
RoHS Exemption	6(c)
SCIP notification number (Austria)	2539418b-58c0-4420-b110-a8f6ab77c7d3
SCIP notification number (Belgium)	40b91dd3-96ec-45e4-98a3-341b4f102193
SCIP notification number (Bulgaria)	2c7e6bcf-0e3a-4874-bd96-ca190e7a4a9e
SCIP notification number (Czech Republic)	6ae9ae04-5491-4be6-9408-287c5cac46ef
SCIP notification number (Denmark)	ee055b55-ddba-4b30-b59e-050f53013fbf
SCIP notification number (Finland)	b9f0e73b-b87a-4d38-9f60-07226fdca07c
SCIP notification number (France)	777cf7f1-adc1-488b-8b47-2ec5717e1dbc
SCIP notification number (Germany)	f86c9c1d-6b5b-4fcb-967f-87dfd241ff49
SCIP notification number (Hungary)	e64905c2-f29e-42da-ae87-c0d1394acf4c
SCIP notification number (Italy)	3deffdb3-7962-4859-bb7b-d7bfa4bf193c
SCIP notification number (Netherlands)	f5917138-401f-4204-8cee-f8469370655a
SCIP notification number (Poland)	8d29f775-0f15-49b0-9c59-e38ab34f044f
SCIP notification number (Romania)	1779a648-224f-4eb8-9cbf-7df1a926218b
SCIP notification number (Sweden)	62c7a902-eab2-4325-8850-9887794132d4

Continued on next page

Downloads

Environmental Product Compliance

Compliance Search

Environmental Product Compliance 215-212

Documentation

Bid Text

215-212	19.02.2019	xml 3.02 KB
215-212	19.09.2017	doc 24.50 KB

CAD/CAE-Data

CAD data

2D/3D Models 215-212

CAE data

EPLAN Data Portal 215-212

WSCAD Universe 215-212

Installation Notes

Conductor termination

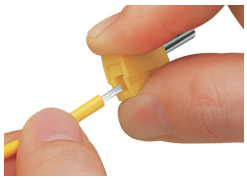

Conductor termination: Press button fully, insert stripped conductor into square entry and release.

Testing

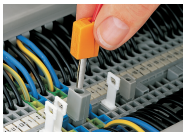

Testing via banana plug.
Picture shows a test plug adapter (Item No. 209-170).