Data Sheet | Item Number: 215-611

Banana plug; for socket 4 mm Ø; 2,50 mm²; white

https://www.wago.com/215-611

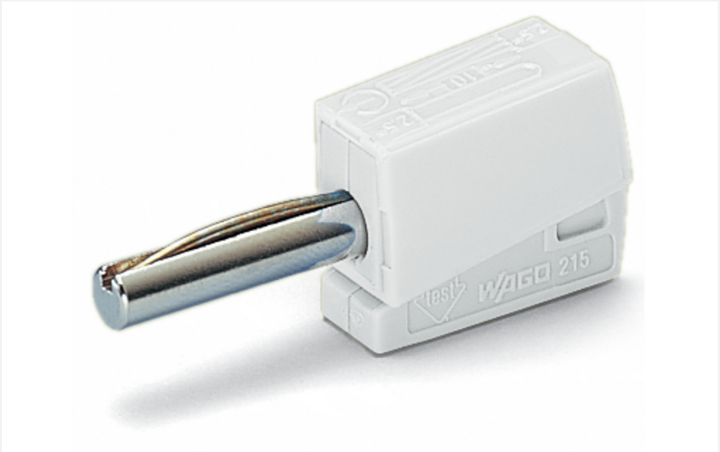

Color: white

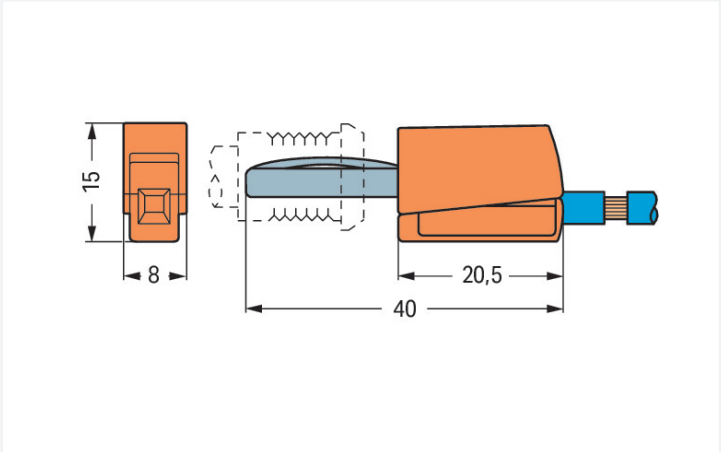

Dimensions in mm

Technical data

Total number of potentials	1

Electrical data

Rated current	20 A
Test voltage	42 V

Connection Data

Connection technology	CAGE CLAMP®
Strip length	9 … 11 mm / 0.35 … 0.43 inches
Clamping units	1
Solid conductor	0.08 … 2.5 mm² / 28 … 14 AWG
Fine-stranded conductor	0.08 … 2.5 mm² / 28 … 14 AWG

Physical data

Width	8 mm / 0.315 inches
Height	15 mm / 0.591 inches
Depth	40 mm / 1.575 inches

Material data

Color	white
Fire load	0.04 MJ
Weight	3.9 g

Commercial data

Product Group	2 (Terminal Block Accessories)
PU (SPU)	50 pcs
Packaging type	Box
Country of origin	DE
GTIN	4045454293536
Customs tariff number	85366990990

Product Classification

UNSPSC	39121421
eCl@ss 10.0	27-44-03-13
eCl@ss 9.0	27-44-03-13
ETIM 9.0	EC002255
ETIM 10.0	EC002255
ECCN	NO US CLASSIFICATION

Environmental Product Compliance

CAS-No.	7439-92-1
REACH Candidate List Substance	Lead
RoHS Compliance Status	Compliant,With Exemption
RoHS Exemption	6(c)
SCIP notification number (Austria)	675cc8ff-f6ae-4c46-9a60-3ea0a0f460d9
SCIP notification number (Belgium)	56c5dcf4-508a-4868-a586-544637bcf0ee
SCIP notification number (Bulgaria)	5a5afa3b-377f-4e6c-bf09-65741106b324
SCIP notification number (Czech Republic)	609d05d3-fd7e-4da4-8ab2-71f00a086401
SCIP notification number (Denmark)	f187967d-33a9-4211-9980-9f255c623bb9
SCIP notification number (Finland)	eb85138e-3889-4a07-a87e-25abeb8fffd9
SCIP notification number (France)	043f5732-eda2-4ef9-aabc-645b5d884d52
SCIP notification number (Germany)	6022578d-1e7e-4789-b421-b986fdbe7c97
SCIP notification number (Hungary)	35eb67a0-91c9-48c7-a6ce-e7ffe291d340
SCIP notification number (Italy)	0b24a49e-fc74-444e-834f-00bb3e3f74b4
SCIP notification number (Netherlands)	842d5267-e2a6-4227-99ae-d9157569497c
SCIP notification number (Poland)	fa5b5feb-ba09-4dd5-8aa4-b9ea8e3ebb86
SCIP notification number (Romania)	aac5de8c-cb45-4821-91fb-0f85a94ab209
SCIP notification number (Sweden)	39908af4-7f7d-469a-a278-d41d1b6fca00

Downloads

Environmental Product Compliance

Compliance Search

Environmental Product Compliance 215-611

Documentation

Bid Text

215-611	19.02.2019	xml 3.02 KB
215-611	19.09.2017	doc 24.50 KB

CAD/CAE-Data

CAD data

2D/3D Models 215-611

CAE data

EPLAN Data Portal
215-611

WSCAD Universe
215-611

Installation Notes

Conductor termination

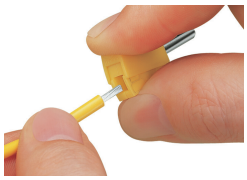

Conductor termination: Press button fully, insert stripped conductor into square entry and release.

Testing

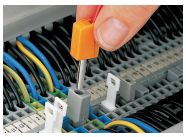

Testing via banana plug.
Picture shows a test plug adapter (Item No. 209-170).