# Data Sheet | Item Number: 2200-1304

3-conductor through terminal block; with push-button; 1 mm²; with test port; suitable for Ex i applications; side and center marking; for DIN-rail 35 x 15 and 35 x 7.5; Push-in CAGE CLAMP®; 1,00 mm²; blue

https://www.wago.com/2200-1304

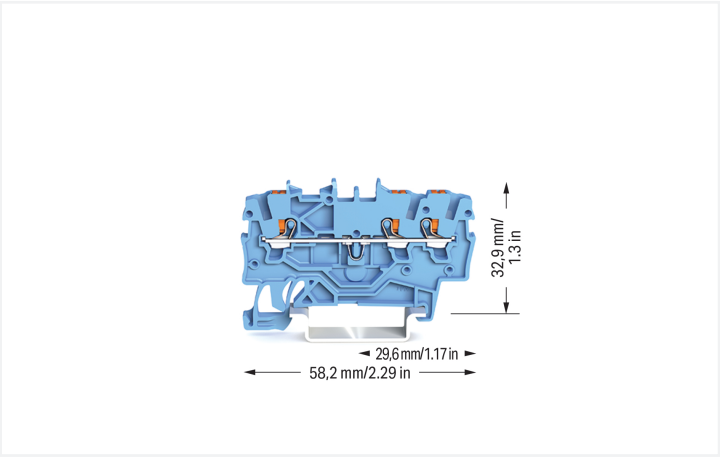


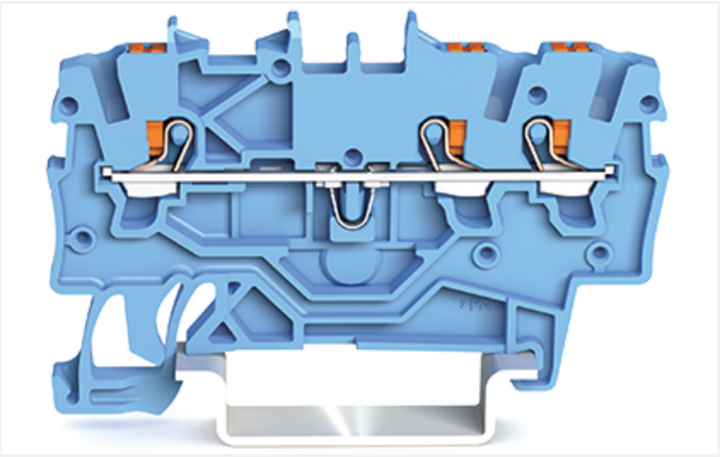

Color: blue



Similar to illustration

Through terminal block, 2200 Series, blue

This through terminal block (item number 2200-1304) streamlines wire connections, making them both quick and easy. Strip lengths must be between 9 and 11 mm when connecting conductors to this through terminal block. Whether for use in industry or building installations, our rail-mount through terminal blocks make it easy to quickly and securely connect electrical conductors. They're perfect for either classic through-wiring or distributing potential, depending on the variant. This product features conductor terminals and utilizes Push-in CAGE CLAMP®. Push-in CAGE CLAMP® connection technology is ideal for connecting all conductor types. It allows direct insertion of both solid and fine-stranded conductors with ferrules without needing to use any tools—all thanks to its pluggable design. The dimensions are (3.5 x 58.2 x 39.5) mm (width x height x depth). Depending on the conductor type, this through terminal block is ideal for conductor cross sections ranging from 0.14 mm² to 1.5 mm².

A push-button is used to operate this through rail-mount terminal block. Our TOPJOB® S rail-mount terminal blocks guarantee reliable electrical connections in different industrial applications and modern building installations. They simplify wiring, as you can quickly plug in solid, stranded, and fine-stranded conductors with ferrules. This product is designed for specific Ex applications (please refer to the product datasheet).

## Electrical data

| Ratings per | IEC/EN 60947-7-1 | | |
|---|---|---|---|
| Overvoltage category | III | III | II |
| Pollution degree | 3 | 2 | 2 |
| Nominal voltage | 800 V | - | - |
| Rated impulse withstand voltage | 8 kV | - | - |
| Rated current | 13.5 A | - | - |
| Current at conductor cross-section (max.) mm² | 17.5 A | - | - |

| Approvals per | UL 1059 | | |
|---|---|---|---|
| Use group | B | C | D |
| Rated voltage | 600 V | 600 V | - |
| Rated current | 10 A | 10 A | - |

| Approvals per | CSA 22.2 No 158 | | |
|---|---|---|---|
| Use group | B | C | D |
| Rated voltage | 600 V | 600 V | - |
| Rated current | 10 A | 10 A | - |

### Ex information

| | |
|---|---|
| Reference to hazardous areas | See “Downloads – Documentation – Additional Information: Technical Section; Technical Explications” |
| Ratings per | ATEX: PTB 18 ATEX 1004 U / IECEx: PTB 18.0010U (Ex eb IIC Gb) |
| Rated voltage EN (Ex e II) | 550 V |
| Rated current (Ex e II) | 13 A |
| Rated current (Ex e II) with jumper | 12 A |

### Power Loss

| | |
|---|---|
| Power loss, per pole (potential) | 0.7711 W |
| Rated current $I_N$ for power loss specification | 18 A |
| Resistance value for specified, current-dependent power loss | 0.00238 Ω |

### General information

| | |
|---|---|
| Wiring direction | Front-entry wiring |

## Connection Data

| | |
|---|---|
| Clamping units | 3 |
| Total number of potentials | 1 |
| Number of levels | 1 |
| Number of jumper slots | 2 |

### Connection 1

| | |
|---|---|
| Connection technology | Push-in CAGE CLAMP® |
| Actuation type | Push-button |
| Connectable conductor materials | Copper |
| Nominal cross-section | 1 mm² |
| Solid conductor | 0.14 … 1.5 mm² / 24 … 16 AWG |
| Solid conductor; push-in termination | 0.5 … 1.5 mm² / 20 … 16 AWG |
| Stranded conductor | 0.14 … 1.5 mm² / 24 … 16 AWG |
| Fine-stranded conductor | 0.14 … 1.5 mm² / 24 … 16 AWG |
| Fine-stranded conductor; with insulated ferrule | 0.14 … 0.75 mm² / 24 … 18 AWG |
| Fine-stranded conductor; with ferrule; push-in termination | 0.5 … 0.75 mm² / 20 … 18 AWG |
| Note (conductor cross-section) | Depending on the conductor characteristic, a conductor with a smaller cross-section can also be inserted via push-in termination. |
| Strip length | 9 … 11 mm / 0.35 … 0.43 inches |
| Wiring direction | Front-entry wiring |


Continued on next page

## Physical data

| | |
|---|---|
| Width | 3.5 mm / 0.138 inches |
| Height | 58.2 mm / 2.291 inches |
| Depth from upper-edge of DIN-rail | 32.9 mm / 1.295 inches |
| Depth | 39.5 mm / 1.555 inches |

## Mechanical data

| | |
|---|---|
| Mounting type | DIN-35 rail |
| Marking level | Center/side marking |

## Material data

| | |
|---|---|
| Note (material data) | Information on material specifications can be found here |
| Color | blue |
| Material group | I |
| Insulation material (main housing) | Polyamide (PA66) |
| Flammability class per UL94 | V0 |
| Fire load | 0.103 MJ |
| Actuator color | orange |
| Weight | 4.2 g |

## Environmental requirements

| | |
|---|---|
| Processing temperature | -35 … +85 °C |
| Continuous operating temperature | -60 … +105 °C |

### Environmental Testing

| | |
|---|---|
| Test specification: Railway applications – Rolling stock – Electronic equipment | DIN EN 50155 (VDE 0115-200):2022-06 |
| Test procedure: Railway applications – Rolling stock equipment – Vibration and shock tests | DIN EN 61373 (VDE 0115-0106):2011-04 |
| Spectrum/Mounting location | Service life test, Category 1, Class A/B |
| Functional test with noise-like oscillations | Test passed according to Section 8 of the standard |
| Frequency | $f_1$ = 5 Hz to $f_2$ = 150 Hz |
| Acceleration | 0.101g (highest test level used for all axes) |
| Test duration per axis | 10 min. |
| Test directions | X, Y and Z axes |
| Monitoring of contact faults and interruptions | Passed |
| Voltage drop measurement before and after each axis | Passed |
| Simulated service life test through increased levels of noise-like oscillations | Test passed according to Section 9 of the standard |
| Frequency | $f_1$ = 5 Hz to $f_2$ = 150 Hz |
| Acceleration | 0.572g (highest test level used for all axes) |
| Test duration per axis | 5 h |
| Test directions | X, Y and Z axes |
| Extended testing: Monitoring of contact faults and interruptions | Passed |
| Extended testing: Voltage drop measurement before and after each axis | Passed |
| Shock test | Test passed according to Section 10 of the standard |
| Shock pulse form | Half sine |
| Acceleration | 5g (highest test level used for all axes) |
| Shock duration | 30 ms |
| Number of shocks (per axis) | 3 pos. und 3 neg. |


Continued on next page

## Environmental Testing

| | |
|---|---|
| Test directions | X, Y and Z axes |
| Extended testing: Monitoring of contact faults and interruptions | Passed |
| Extended testing: Voltage drop measurement before and after each axis | Passed |
| Vibration and shock stress for rolling stock equipment | Passed |

## Commercial data

| | |
|---|---|
| PU (SPU) | 100 pcs |
| Packaging type | Box |
| Country of origin | DE |
| GTIN | 4055143691628 |
| Customs tariff number | 85369010000 |

## Product Classification

| | |
|---|---|
| UNSPSC | 39121410 |
| eCl@ss 10.0 | 27-14-11-20 |
| eCl@ss 9.0 | 27-14-11-20 |
| ETIM 9.0 | EC000897 |
| ETIM 10.0 | EC000897 |
| ECCN | NO US CLASSIFICATION |

## Environmental Product Compliance

| | |
|---|---|
| RoHS Compliance Status | Compliant,No Exemption |

## Approvals / Certificates

### General approvals

| Approval | Standard | Certificate Name |
|---|---|---|
| CCA<br>DEKRA Certification B.V. | EN 60947 | NTR NL 8026 |
| CSA<br>CSA Group | C22.2 | 70173737 |
| cURus<br>Underwriters Laboratories Inc. | UL 1059 | E45172 |
| KEMA/KEUR<br>DEKRA Certification B.V. | EN 60947 | 71-134795 |

### Declarations of conformity and manufacturer's declarations

| Approval | Standard | Certificate Name |
|---|---|---|
| ATEX-Attestation of Conformity<br>WAGO GmbH & Co. KG | - | - |
| EU-Declaration of Conformity<br>WAGO GmbH & Co. KG | - | - |
| Railway<br>WAGO GmbH & Co. KG | - | Z00004402.000 |
| UK-Declaration of Conformity<br>WAGO GmbH & Co. KG | - | - |

 Continued on next page

## Approvals for marine applications

| Approval | Standard | Certificate Name |
|---|---|---|
| ABS<br>American Bureau of Shipping | - | 24-0095985-PDA |
| BV<br>Bureau Veritas S.A. | IEC 60947 | 58186/A0 BV |
| DNV GL<br>Det Norske Veritas, Germanischer Lloyd | - | TAE00003JT |
| LR<br>Lloyds Register | - | 19/20050 |
| PRS<br>Polski Rejestr Statków | - | TAE00003JT |

## Approvals for hazardous areas

| Approval | Standard | Certificate Name |
|---|---|---|
| AEx<br>Underwriters Laboratories Inc. | UL 60079 | E185892 (AEx eb IIC resp. Ex eb IIC) |
| ATEX<br>Physikalisch Technische Bundesanstalt | EN IEC 60079-0 | PTB 18 ATEX 1003 U |
| CCC<br>CQST/CNEx | GB/T 3836.3 | 2020312313000166 (Ex eb IIC Gb, Ex eb I Mb) |
| IECEx<br>Physikalisch Technische Bundesanstalt | IEC 60079 | IECEx PTB 18.0010U (Ex eb IIC Gb and Ex eb I Mb) |
| INMETRO<br>TÜV Rheinland do Brasil Ltda. | IEC 60079 | TÜV 23.1452 U |

## Downloads

### Environmental Product Compliance

**Compliance Search**

Environmental Product Compliance 2200-1304

### Documentation

**Bid Text**

| | | |
|---|---|---|
| 2200-1304 | 19.02.2019 | xml<br>3.80 KB |
| 2200-1304 | 08.08.2018 | docx<br>14.78 KB |

### CAD/CAE-Data

**CAD data**

2D/3D Models 2200-1304

**CAE data**

EPLAN Data Portal 2200-1304

ZUKEN Portal 2200-1304

# 1 Compatible Products

## 1.1 Required Accessories

### 1.1.1 End plate

#### 1.1.1.1 End plate



Item No.: 2000-1391
End and intermediate plate; 0.7 mm thick; gray



Item No.: 2000-1392
End and intermediate plate; 0.7 mm thick; orange



Item No.: 209-191
Separator for Ex e/Ex i applications; 3 mm thick; 120 mm wide; orange

## 1.2 Optional Accessories

### 1.2.1 DIN-rail

#### 1.2.1.1 Mounting accessories



Item No.: 210-196
Aluminum carrier rail; 35 x 8.2 mm; 1.6 mm thick; 2 m long; unslotted; similar to EN 60715; silver-colored



Item No.: 210-198
Copper carrier rail; 35 x 15 mm; 2.3 mm thick; 2 m long; unslotted; according to EN 60715; copper-colored



Item No.: 210-197
Steel carrier rail; 35 x 15 mm; 1.5 mm thick; 2 m long; slotted; similar to EN 60715; silver-colored



Item No.: 210-114
Steel carrier rail; 35 x 15 mm; 1.5 mm thick; 2 m long; unslotted; similar to EN 60715; silver-colored



Item No.: 210-118
Steel carrier rail; 35 x 15 mm; 2.3 mm thick; 2 m long; unslotted; according to EN 60715; silver-colored



Item No.: 210-115
Steel carrier rail; 35 x 7.5 mm; 1 mm thick; 2 m long; slotted; according to EN 60715; "Hole width 18 mm; silver-colored



Item No.: 210-112
Steel carrier rail; 35 x 7.5 mm; 1 mm thick; 2 m long; slotted; according to EN 60715; "Hole width 25 mm; silver-colored



Item No.: 210-113
Steel carrier rail; 35 x 7.5 mm; 1 mm thick; 2 m long; unslotted; according to EN 60715; silver-colored

### 1.2.2 Ferrule

#### 1.2.2.1 Ferrule



Item No.: 216-241
Ferrule; Sleeve for 0.5 mm² / 20 AWG; insulated; electro-tin plated; electrolytic copper; gastight crimped; acc. to DIN 46228, Part 4/09.90; white



Item No.: 216-242
Ferrule; Sleeve for 0.75 mm² / 18 AWG; insulated; electro-tin plated; electrolytic copper; gastight crimped; acc. to DIN 46228, Part 4/09.90; gray



Item No.: 216-243
Ferrule; Sleeve for 1 mm² / AWG 18; insulated; electro-tin plated; electrolytic copper; gastight crimped; acc. to DIN 46228, Part 4/09.90; red

### 1.2.3 Installation

#### 1.2.3.1 Cover



Item No.: 709-156
Cover; Type 3; suitable for cover carrier, type 3; 1 m long; transparent

### 1.2.3.2 Cover carrier



Item No.: 709-169
Cover carrier; Type 3; incl. fixing/retaining screws and knurled nut; suitable for 279 to 282 and 880 Series rail-mounted terminal blocks; suitable for 264 Series miniature rail-mounted terminal blocks; suitable for 270 Series sensor and actuator terminal blocks; gray

## 1.2.4 Jumper

### 1.2.4.1 Jumper



Item No.: 2000-406/020-000
Delta jumper; insulated; light gray



Item No.: 2000-410/000-006
Jumper; 10-way; insulated; blue



Item No.: 2000-410
Jumper; 10-way; insulated; light gray



Item No.: 2000-410/000-005
Jumper; 10-way; insulated; red



Item No.: 2000-402/000-006
Jumper; 2-way; insulated; blue



Item No.: 2000-402
Jumper; 2-way; insulated; light gray



Item No.: 2000-402/000-005
Jumper; 2-way; insulated; red



Item No.: 2000-402/000-018
Jumper; 2-way; insulated; yellow-green



Item No.: 2000-403/000-006
Jumper; 3-way; insulated; blue



Item No.: 2000-403
Jumper; 3-way; insulated; light gray



Item No.: 2000-403/000-005
Jumper; 3-way; insulated; red



Item No.: 2000-404/000-006
Jumper; 4-way; insulated; blue



Item No.: 2000-404
Jumper; 4-way; insulated; light gray



Item No.: 2000-404/000-005
Jumper; 4-way; insulated; red



Item No.: 2000-405/000-006
Jumper; 5-way; insulated; blue



Item No.: 2000-405
Jumper; 5-way; insulated; light gray



Item No.: 2000-405/000-005
Jumper; 5-way; insulated; red



Item No.: 2000-406/000-006
Jumper; 6-way; insulated; blue



Item No.: 2000-406
Jumper; 6-way; insulated; light gray



Item No.: 2000-406/000-005
Jumper; 6-way; insulated; red



Item No.: 2000-407/000-006
Jumper; 7-way; insulated; blue



Item No.: 2000-407
Jumper; 7-way; insulated; light gray



Item No.: 2000-407/000-005
Jumper; 7-way; insulated; red



Item No.: 2000-408/000-006
Jumper; 8-way; insulated; blue



Item No.: 2000-408
Jumper; 8-way; insulated; light gray



Item No.: 2000-408/000-005
Jumper; 8-way; insulated; red



Item No.: 2000-409/000-006
Jumper; 9-way; insulated; blue



Item No.: 2000-409
Jumper; 9-way; insulated; light gray



Item No.: 2000-409/000-005
Jumper; 9-way; insulated; red



Item No.: 2000-440
Jumper; from 1 to 10; insulated; light gray



Item No.: 2000-433/000-006
Jumper; from 1 to 3; insulated; blue



Item No.: 2000-433
Jumper; from 1 to 3; insulated; light gray



Item No.: 2000-433/000-005
Jumper; from 1 to 3; insulated; red



Item No.: 2000-434
Jumper; from 1 to 4; insulated; light gray



Item No.: 2000-435
Jumper; from 1 to 5; insulated; light gray



Item No.: 2000-436
Jumper; from 1 to 6; insulated; light gray



Item No.: 2000-437
Jumper; from 1 to 7; insulated; light gray



Item No.: 2000-438
Jumper; from 1 to 8; insulated; light gray



Item No.: 2000-439
Jumper; from 1 to 9; insulated; light gray



Item No.: 2000-405/011-000
Star point jumper; 3-way; insulated; light gray



Item No.: 210-103
Wire commoning chain; 0.5 mm²; insulated; black



Item No.: 210-123
Wire commoning chain; insulated; blue

## 1.2.5 Marking

### 1.2.5.1 Marker



Item No.: 793-3501
WMB marking card; as card; plain; snap-on type; white



Item No.: 2009-113/000-006
WMB-Inline; for Smart Printer; 2300 pieces on roll; plain; snap-on type; blue



Item No.: 2009-113/000-007
WMB-Inline; for Smart Printer; 2300 pieces on roll; plain; snap-on type; gray



Item No.: 2009-113/000-023
WMB-Inline; for Smart Printer; 2300 pieces on roll; plain; snap-on type; green



Item No.: 2009-113/000-017
WMB-Inline; for Smart Printer; 2300 pieces on roll; plain; snap-on type; light green



Item No.: 2009-113/000-012
WMB-Inline; for Smart Printer; 2300 pieces on roll; plain; snap-on type; orange



Item No.: 2009-113/000-005
WMB-Inline; for Smart Printer; 2300 pieces on roll; plain; snap-on type; red



Item No.: 2009-113/000-024
WMB-Inline; for Smart Printer; 2300 pieces on roll; plain; snap-on type; violet



Item No.: 2009-113
WMB-Inline; for Smart Printer; 2300 pieces on roll; plain; snap-on type; white



Item No.: 2009-113/000-002
WMB-Inline; for Smart Printer; 2300 pieces on roll; plain; snap-on type; yellow

### 1.2.5.2 Marking strip



Item No.: 2009-110
Marking strips; for Smart Printer; on reel; not stretchable; plain; snap-on type; white

## 1.2.6 Push-in type wire jumper

### 1.2.6.1 Jumper



Item No.: 2009-404
Push-in type wire jumper; 0.75 mm²; insulated; 110 mm long; gray



Item No.: 2009-406
Push-in type wire jumper; 0.75 mm²; insulated; 250 mm long; gray



Item No.: 2009-402
Push-in type wire jumper; 0.75 mm²; insulated; 60 mm long; gray

## 1.2.7 Screwless end stop

### 1.2.7.1 Mounting accessories



Item No.: 249-117
Screwless end stop; 10 mm wide; for DIN-rail 35 x 15 and 35 x 7.5; gray



Item No.: 249-116
Screwless end stop; 6 mm wide; for DIN-rail 35 x 15 and 35 x 7.5; gray

## 1.2.8 Test and measurement

### 1.2.8.1 Testing accessories



Item No.: 2000-560
Modular TOPJOB®S connector; modular; for jumper contact slot; 10-pole; gray



Item No.: 2000-552
Modular TOPJOB®S connector; modular; for jumper contact slot; 2-pole; gray



Item No.: 2000-553
Modular TOPJOB®S connector; modular; for jumper contact slot; 3-pole; gray



Item No.: 2000-554
Modular TOPJOB®S connector; modular; for jumper contact slot; 4-pole; gray



Item No.: 2000-555
Modular TOPJOB®S connector; modular; for jumper contact slot; 5-pole; gray



Item No.: 2000-556
Modular TOPJOB®S connector; modular; for jumper contact slot; 6-pole; gray



Item No.: 2000-557
Modular TOPJOB®S connector; modular; for jumper contact slot; 7-pole; gray



Item No.: 2000-558
Modular TOPJOB®S connector; modular; for jumper contact slot; 8-pole; gray


Continued on next page

### 1.2.8.1 Testing accessories



Item No.: 2000-559
Modular TOPJOB®S connector; modular; for jumper contact slot; 9-pole; gray



Item No.: 2000-549
Spacer module; modular; e.g., for bridging commoned terminal blocks; gray



Item No.: 2009-174
Test plug adapter; for 4 mm Ø test plugs; for testing TOPJOB®S rail-mounted terminal blocks; gray



Item No.: 210-136
Test plug; 2 mm Ø; with 500 mm cable; red



Item No.: 2009-182
Testing tap; for max. 2.5 mm²; tool-free connection for individual test wires 0.08 - 2.5 mm; gray



Item No.: 2000-511
TOPJOB®S L-type test plug module; modular; for jumper contact slot; 1-pole; gray



Item No.: 2000-510
TOPJOB®S L-type test plug module; modular; for jumper contact slot; gray

## 1.2.9 Tool

### 1.2.9.1 Operating tool



Item No.: 210-719
Operating tool; Blade: 2.5 x 0.4 mm; with a partially insulated shaft



Item No.: 210-648
Operating tool; Blade: 2.5 x 0.4 mm; with a partially insulated shaft; angled; short



Item No.: 210-647
Operating tool; Blade: 2.5 x 0.4 mm; with a partially insulated shaft; multicoloured

## Installation Notes

### Conductor termination

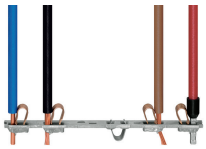

**All conductor types at a glance**



Push-in termination of solid and ferruled conductors



Insert fine-stranded conductors via operating tool.



Removing all conductors via operating tool.

### Commoning

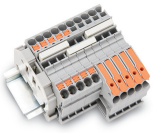

Insert a push-in type jumper bar and push down until it hits the backstop.



Commoning with step-down jumpers.

### Testing



Testing with a 2 mm Ø test plug (max. 42 V).

## Marking

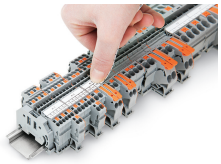

Snapping a marking strip into a marker slot.

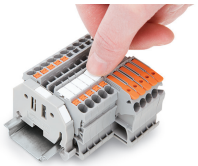

Snapping a marking strip into the marker slot.