Data Sheet | Item Number: 2202-1403

4-conductor through terminal block; with push-button; 2.5 mm²; with test port; suitable for Ex e II applications; side and center marking; for DIN-rail 35 x 15 and 35 x 7.5; Push-in CAGE CLAMP®; 2,50 mm²; red

https://www.wago.com/2202-1403

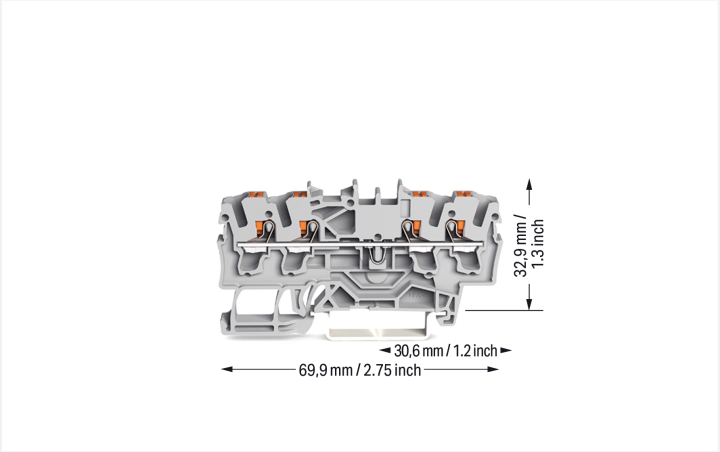

Color: red

Similar to illustration

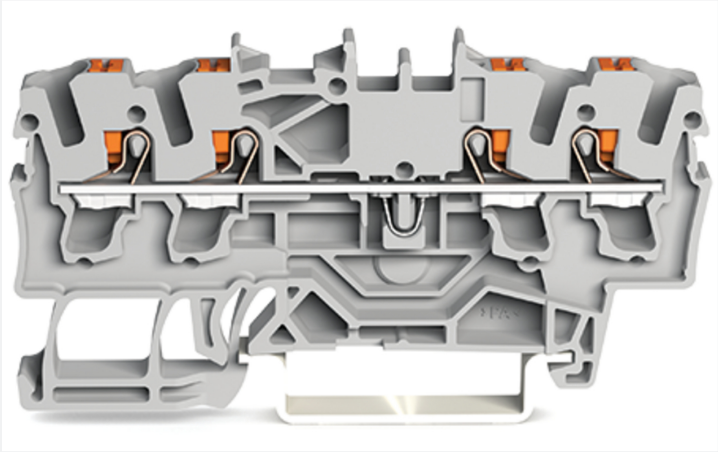

Similar to illustration

Similar to illustration

Through terminal block, 2202 Series, red

Our through terminal block (item number 2202-1403) makes connecting wires quick and easy. Ensure that the strip lengths are between 10 and 12 mm when connecting conductors to this through terminal block. Whether in industrial or building applications, our rail-mount through terminal blocks are the perfect solution to quickly and securely connect electrical conductors. Depending on the version, you can use them for either typical through-wiring or potential distribution. This product features conductor terminals and utilizes Push-in CAGE CLAMP®. Push-in CAGE CLAMP® connection technology is ideal for connecting all conductor types. Solid and fine-stranded conductors with ferrules can be inserted without needing to use any tools—all thanks to its pluggable design. Dimensions: (5.2 x 69.9 x 39.5) mm (width x height x depth). Depending on the conductor type, this through terminal block is suitable for conductor cross sections ranging from 0.25 mm² to 4 mm².

This through rail-mount terminal block is operated with a push-button. Our TOPJOB® S rail-mount terminal blocks guarantee secure electrical connections in different industrial applications and modern building installations. They simplify wiring, as you can quickly plug in solid, stranded, and fine-stranded conductors with ferrules. This product is designed for specific Ex applications (please refer to the product datasheet).

Electrical data

Ratings per	IEC/EN 60947-7-1		
Overvoltage category	III	III	II
Pollution degree	3	2	2
Nominal voltage	800 V	-	-
Rated impulse withstand voltage	8 kV	-	-
Rated current	24 A	-	-
Current at conductor cross-section (max.) mm²	32 A	-	-

Approvals per	UL 1059		
Use group	B	C	D
Rated voltage	600 V	600 V	-
Rated current	20 A	20 A	-

Approvals per	CSA 22.2 No 158		
Use group	B	C	D
Rated voltage	600 V	600 V	-
Rated current	20 A	20 A	-

Ex information

Reference to hazardous areas	See “Downloads – Documentation – Additional Information: Technical Section; Technical Explications”
Ratings per	ATEX: PTB 18 ATEX 1005 U / IECEx: PTB 18.0012U (Ex eb IIC Gb)
Rated voltage EN (Ex e II)	550 V
Rated current (Ex e II)	22 A
Rated current (Ex e II) with jumper	20 A

Power Loss

Power loss, per pole (potential)	0.7661 W
Rated current I_N for power loss specification	24 A
Resistance value for specified, current-dependent power loss	0.00133 Ω

General information

Wiring direction	Front-entry wiring

Connection Data

Clamping units	4
Total number of potentials	1
Number of levels	1
Number of jumper slots	2

Connection 1

Connection technology	Push-in CAGE CLAMP®
Actuation type	Push-button
Connectable conductor materials	Copper
Nominal cross-section	2.5 mm²
Solid conductor	0.25 … 4 mm² / 22 … 12 AWG
Solid conductor; push-in termination	0.75 … 4 mm² / 18 … 12 AWG
Stranded conductor	0.25 … 4 mm² / 22 … 12 AWG
Fine-stranded conductor	0.25 … 4 mm² / 22 … 12 AWG
Fine-stranded conductor; with insulated ferrule	0.25 … 2.5 mm² / 22 … 14 AWG
Fine-stranded conductor; with ferrule; push-in termination	1 … 2.5 mm² / 18 … 14 AWG
Note (conductor cross-section)	Depending on the conductor characteristic, a conductor with a smaller cross-section can also be inserted via push-in termination.
Strip length	10 … 12 mm / 0.39 … 0.47 inches
Wiring direction	Front-entry wiring

Continued on next page

Physical data

Width	5.2 mm / 0.205 inches
Height	69.9 mm / 2.752 inches
Depth from upper-edge of DIN-rail	32.9 mm / 1.295 inches
Depth	39.5 mm / 1.555 inches

Mechanical data

Mounting type	DIN-35 rail
Marking level	Center/side marking

Material data

Note (material data)	Information on material specifications can be found here
Color	red
Material group	I
Insulation material (main housing)	Polyamide (PA66)
Flammability class per UL94	V0
Fire load	0.144 MJ
Actuator color	orange
Weight	7.8 g

Environmental requirements

Processing temperature	-35 … +85 °C
Continuous operating temperature	-60 … +105 °C

Environmental Testing

Test specification: Railway applications – Rolling stock – Electronic equipment	DIN EN 50155 (VDE 0115-200):2022-06
Test procedure: Railway applications – Rolling stock equipment – Vibration and shock tests	DIN EN 61373 (VDE 0115-0106):2011-04
Spectrum/Mounting location	Service life test, Category 1, Class A/B
Functional test with noise-like oscillations	Test passed according to Section 8 of the standard
Frequency	f_1 = 5 Hz to f_2 = 150 Hz
Acceleration	0.101g (highest test level used for all axes)
Test duration per axis	10 min.
Test directions	X, Y and Z axes
Monitoring of contact faults and interruptions	Passed
Voltage drop measurement before and after each axis	Passed
Simulated service life test through increased levels of noise-like oscillations	Test passed according to Section 9 of the standard
Frequency	f_1 = 5 Hz to f_2 = 150 Hz
Acceleration	0.572g (highest test level used for all axes)
Test duration per axis	5 h
Test directions	X, Y and Z axes
Extended testing: Monitoring of contact faults and interruptions	Passed
Extended testing: Voltage drop measurement before and after each axis	Passed
Shock test	Test passed according to Section 10 of the standard
Shock pulse form	Half sine
Acceleration	5g (highest test level used for all axes)
Shock duration	30 ms
Number of shocks (per axis)	3 pos. und 3 neg.

Continued on next page

Environmental Testing

Test directions	X, Y and Z axes
Extended testing: Monitoring of contact faults and interruptions	Passed
Extended testing: Voltage drop measurement before and after each axis	Passed
Vibration and shock stress for rolling stock equipment	Passed

Commercial data

PU (SPU)	100 pcs
Packaging type	Box
Country of origin	DE
GTIN	4055143852074
Customs tariff number	85369010000

Product Classification

UNSPSC	39121410
ETIM 9.0	EC000897
ETIM 10.0	EC000897
ECCN	NO US CLASSIFICATION

Environmental Product Compliance

RoHS Compliance Status	Compliant,No Exemption

Approvals / Certificates

General approvals

Approval	Standard	Certificate Name
CCA DEKRA Certification B.V.	EN 60947	NTR NL-8032
CSA CSA Group	C22.2	70173745
DEKRA DEKRA Certification B.V.	EN 60947	71-147887
KEMA/KEUR DEKRA Certification B.V.	EN 60947	71-137338
UL Underwriters Laboratories Inc.	UL 1059	UL-CA-L45172-6189178-11508102-1

Declarations of conformity and manufacturer's declarations

Approval	Standard	Certificate Name
ATEX-Attestation of Conformity WAGO GmbH & Co. KG	-	-
EU-Declaration of Conformity WAGO GmbH & Co. KG	-	-
Railway WAGO GmbH & Co. KG	-	Z00004404.000
UK-Declaration of Conformity WAGO GmbH & Co. KG	-	-

Approvals for marine applications

Approval	Standard	Certificate Name
ABS American Bureau of Shipping	-	24-0095985-PDA
BV Bureau Veritas S.A.	IEC 60947	58186/A0 BV

Approvals for marine applications

DNV GL Det Norske Veritas, Germanischer Lloyd	-	TAE00003JT
LR Lloyds Register	-	19/20050

Continued on next page

Approvals for hazardous areas

Approval	Standard	Certificate Name
AEx Underwriters Laboratories Inc.	UL 60079	E185892 (AEx eb IIC resp. Ex eb IIC)
ATEX Physikalisch Technische Bundesanstalt	EN IEC 60079-0	PTB 18 ATEX 1005 U (II 2 G Ex eb IIC Gb bzw. I M 2 Ex eb I Mb)
CCC CQST/CNEx	GB/T 3836.3	2020312313000169
IECEx Physikalisch Technische Bundesanstalt	IEC 60079	IECEx PTB 18.0012U (Ex eb IIC Gb and Ex eb I Mb)
INMETRO TÜV Rheinland do Brasil Lt-da.	IEC 60079	TÜV 19.0084 U

Downloads

Environmental Product Compliance

Compliance Search

Environmental Product Compliance 2202-1403

CAD/CAE-Data

CAD data

2D/3D Models 2202-1403

CAE data

ZUKEN Portal 2202-1403

1 Compatible Products

1.1 Required Accessories

1.1.1 End plate

1.1.1.1 End plate



Item No.: 2002-1491
End and intermediate plate; 0.8 mm thick; gray



Item No.: 2002-1492
End and intermediate plate; 0.8 mm thick; orange



Item No.: 209-191
Separator for Ex e/Ex i applications; 3 mm thick; 120 mm wide; orange

1.2 Optional Accessories

1.2.1 DIN-rail

1.2.1.1 Mounting accessories



Item No.: 210-196
Aluminum carrier rail; 35 x 8.2 mm; 1.6 mm thick; 2 m long; unslotted; similar to EN 60715; silver-colored



Item No.: 210-198
Copper carrier rail; 35 x 15 mm; 2.3 mm thick; 2 m long; unslotted; according to EN 60715; copper-colored



Item No.: 210-508
Steel carrier rail; 35 x 15 mm; 1.5 mm thick; 2 m long; slotted; galvanized; similar to EN 60715; silver-colored



Item No.: 210-197
Steel carrier rail; 35 x 15 mm; 1.5 mm thick; 2 m long; slotted; similar to EN 60715; silver-colored



Item No.: 210-506
Steel carrier rail; 35 x 15 mm; 1.5 mm thick; 2 m long; unslotted; galvanized; similar to EN 60715; silver-colored



Item No.: 210-114
Steel carrier rail; 35 x 15 mm; 1.5 mm thick; 2 m long; unslotted; similar to EN 60715; silver-colored



Item No.: 210-118
Steel carrier rail; 35 x 15 mm; 2.3 mm thick; 2 m long; unslotted; according to EN 60715; silver-colored



Item No.: 210-115
Steel carrier rail; 35 x 7.5 mm; 1 mm thick; 2 m long; slotted; according to EN 60715; "Hole width 18 mm; silver-colored



Item No.: 210-112
Steel carrier rail; 35 x 7.5 mm; 1 mm thick; 2 m long; slotted; according to EN 60715; "Hole width 25 mm; silver-colored



Item No.: 210-504
Steel carrier rail; 35 x 7.5 mm; 1 mm thick; 2 m long; slotted; galvanized; according to EN 60715; silver-colored



Item No.: 210-113
Steel carrier rail; 35 x 7.5 mm; 1 mm thick; 2 m long; unslotted; according to EN 60715; silver-colored



Item No.: 210-505
Steel carrier rail; 35 x 7.5 mm; 1 mm thick; 2 m long; unslotted; galvanized; according to EN 60715; silver-colored

1.2.2 End plate

1.2.2.1 End plate



Item No.: 2002-1493
Seperator plate; 2 mm thick; oversized; gray



Item No.: 2002-1494
Seperator plate; 2 mm thick; oversized; orange

1.2.3 Ferrule

1.2.3.1 Ferrule

Item No.: 216-241
Ferrule; Sleeve for 0.5 mm² / 20 AWG; insulated; electro-tin plated; electrolytic copper; gastight crimped; acc. to DIN 46228, Part 4/09.90; white

Item No.: 216-242
Ferrule; Sleeve for 0.75 mm² / 18 AWG; insulated; electro-tin plated; electrolytic copper; gastight crimped; acc. to DIN 46228, Part 4/09.90; gray

Item No.: 216-262
Ferrule; Sleeve for 0.75 mm² / 18 AWG; insulated; electro-tin plated; electrolytic copper; gastight crimped; acc. to DIN 46228, Part 4/09.90; gray

Item No.: 216-243
Ferrule; Sleeve for 1 mm² / AWG 18; insulated; electro-tin plated; electrolytic copper; gastight crimped; acc. to DIN 46228, Part 4/09.90; red

Item No.: 216-263
Ferrule; Sleeve for 1 mm² / AWG 18; insulated; electro-tin plated; electrolytic copper; gastight crimped; acc. to DIN 46228, Part 4/09.90; red

Item No.: 216-244
Ferrule; Sleeve for 1.5 mm² / AWG 16; insulated; electro-tin plated; electrolytic copper; gastight crimped; acc. to DIN 46228, Part 4/09.90; black

Item No.: 216-264
Ferrule; Sleeve for 1.5 mm² / AWG 16; insulated; electro-tin plated; electrolytic copper; gastight crimped; acc. to DIN 46228, Part 4/09.90; black



Item No.: 216-246
Ferrule; Sleeve for 2.5 mm² / AWG 14; insulated; electro-tin plated; electrolytic copper; gastight crimped; acc. to DIN 46228, Part 4/09.90; blue

Item No.: 216-266
Ferrule; Sleeve for 2.5 mm² / AWG 14; insulated; electro-tin plated; electrolytic copper; gastight crimped; acc. to DIN 46228, Part 4/09.90; blue

Continued on next page

1.2.4 Installation

1.2.4.1 Cover

Item No.: 709-156
Cover; Type 3; suitable for cover carrier, type 3; 1 m long; transparent

1.2.4.2 Cover carrier



Item No.: 709-169
Cover carrier; Type 3; incl. fixing/retaining screws and knurled nut; suitable for 279 to 282 and 880 Series rail-mounted terminal blocks; suitable for 264 Series miniature rail-mounted terminal blocks; suitable for 270 Series sensor and actuator terminal blocks; gray

1.2.5 Insulation stop

1.2.5.1 Insulation stop



Item No.: 2002-171
Insulation stop; 0.25 - 0.5 mm²; 5 pieces/strip; light gray



Item No.: 2002-172
Insulation stop; 0.75 - 1 mm²; 5 pieces/strip; dark gray

1.2.6 Jumper

1.2.6.1 Jumper



Item No.: 2002-400
Continuous jumper; 2-way; insulated; light gray



Item No.: 2002-413
Continuous jumper; 3-way; insulated; light gray



Item No.: 2002-415
Continuous jumper; 5-way; insulated; light gray



Item No.: 2002-423/000-006
Continuous jumper; from 1 to 3; insulated; blue



Item No.: 2002-423
Continuous jumper; from 1 to 3; insulated; light gray



Item No.: 2002-423/000-005
Continuous jumper; from 1 to 3; insulated; red



Item No.: 2002-424/000-006
Continuous jumper; from 1 to 4; insulated; blue



Item No.: 2002-424
Continuous jumper; from 1 to 4; insulated; light gray



Item No.: 2002-424/000-005
Continuous jumper; from 1 to 4; insulated; red



Item No.: 2002-406/020-000
Delta jumper; insulated; light gray



Item No.: 2002-410/000-006
Jumper; 10-way; insulated; blue



Item No.: 2002-410
Jumper; 10-way; insulated; light gray



Item No.: 2002-410/000-005
Jumper; 10-way; insulated; red



Item No.: 2002-402/000-006
Jumper; 2-way; insulated; blue



Item No.: 2002-402
Jumper; 2-way; insulated; light gray



Item No.: 2002-402/000-005
Jumper; 2-way; insulated; red



Item No.: 2002-403/000-006
Jumper; 3-way; insulated; blue



Item No.: 2002-403
Jumper; 3-way; insulated; light gray



Item No.: 2002-403/000-005
Jumper; 3-way; insulated; red



Item No.: 2002-404/000-006
Jumper; 4-way; insulated; blue



Item No.: 2002-404
Jumper; 4-way; insulated; light gray



Item No.: 2002-404/000-005
Jumper; 4-way; insulated; red



Item No.: 2002-405/000-006
Jumper; 5-way; insulated; blue



Item No.: 2002-405
Jumper; 5-way; insulated; light gray

Continued on next page

1.2.6.1 Jumper



Item No.: 2002-405/000-005
Jumper; 5-way; insulated; red



Item No.: 2002-406/000-006
Jumper; 6-way; insulated; blue



Item No.: 2002-406
Jumper; 6-way; insulated; light gray



Item No.: 2002-406/000-005
Jumper; 6-way; insulated; red



Item No.: 2002-407/000-006
Jumper; 7-way; insulated; blue



Item No.: 2002-407
Jumper; 7-way; insulated; light gray



Item No.: 2002-407/000-005
Jumper; 7-way; insulated; red



Item No.: 2002-408/000-006
Jumper; 8-way; insulated; blue



Item No.: 2002-408
Jumper; 8-way; insulated; light gray



Item No.: 2002-408/000-005
Jumper; 8-way; insulated; red



Item No.: 2002-409/000-006
Jumper; 9-way; insulated; blue



Item No.: 2002-409
Jumper; 9-way; insulated; light gray



Item No.: 2002-409/000-005
Jumper; 9-way; insulated; red

Item No.: 2002-440
Jumper; from 1 to 10; insulated; light gray

Item No.: 2002-433
Jumper; from 1 to 3; insulated; light gray



Item No.: 2002-434
Jumper; from 1 to 4; insulated; light gray

Item No.: 2002-435
Jumper; from 1 to 5; insulated; light gray

Item No.: 2002-436
Jumper; from 1 to 6; insulated; light gray

Item No.: 2002-437
Jumper; from 1 to 7; insulated; light gray

Item No.: 2002-438
Jumper; from 1 to 8; insulated; light gray

Item No.: 2002-439
Jumper; from 1 to 9; insulated; light gray



Item No.: 2002-480
Staggered jumper; 10-way; insulated; light gray



Item No.: 2002-481
Staggered jumper; 11-way; insulated; light gray



Item No.: 2002-482
Staggered jumper; 12-way; insulated; light gray



Item No.: 2002-473/011-000
Staggered jumper; 2-way; from 1 to 3; insulated; light gray



Item No.: 2002-472
Staggered jumper; 2-way; insulated; light gray



Item No.: 2002-473
Staggered jumper; 3-way; insulated; light gray



Item No.: 2002-475/011-000
Staggered jumper; 3-way; insulated; light gray



Item No.: 2002-474
Staggered jumper; 4-way; insulated; light gray



Item No.: 2002-475
Staggered jumper; 5-way; insulated; light gray



Item No.: 2002-476
Staggered jumper; 6-way; insulated; light gray



Item No.: 2002-477
Staggered jumper; 7-way; insulated; light gray



Item No.: 2002-478
Staggered jumper; 8-way; insulated; light gray



Item No.: 2002-479
Staggered jumper; 9-way; insulated; light gray



Item No.: 2002-477/011-000
Staggered jumper; insulated; light gray



Item No.: 2002-479/011-000
Staggered jumper; insulated; light gray



Item No.: 2002-481/011-000
Staggered jumper; insulated; light gray



Item No.: 2002-405/011-000
Star point jumper; 3-way; insulated; light gray



Item No.: 2006-499
Step-down jumper; from 2006/2004 to 2004/2002/2001 series; from 2206/2204 to 2204/2202/2201 series; insulated; light gray



Item No.: 2016-499
Step-down jumper; from 2016/2010 to 2010/2006/2004/2002 series; from 2216/2210 to 2210/2206/2204/2202 series; insulated; light gray

Item No.: 210-103
Wire commoning chain; 0.5 mm²; insulated; black

Item No.: 210-123
Wire commoning chain; insulated; blue

Continued on next page

1.2.7 Marking

1.2.7.1 Group marker carrier



Item No.: 2009-191
Group marker carrier; gray



Item No.: 2009-192
Group marker carrier; gray



Item No.: 2009-193
Group marker carrier; gray

1.2.7.2 Marker



Item No.: 2009-145/000-006
Mini-WSB Inline; for Smart Printer; 1700 pieces on roll; stretchable 5 - 5.2 mm; plain; snap-on type; blue



Item No.: 2009-145/000-007
Mini-WSB Inline; for Smart Printer; 1700 pieces on roll; stretchable 5 - 5.2 mm; plain; snap-on type; gray



Item No.: 2009-145/000-023
Mini-WSB Inline; for Smart Printer; 1700 pieces on roll; stretchable 5 - 5.2 mm; plain; snap-on type; green



Item No.: 2009-145/000-012
Mini-WSB Inline; for Smart Printer; 1700 pieces on roll; stretchable 5 - 5.2 mm; plain; snap-on type; orange



Item No.: 2009-145/000-005
Mini-WSB Inline; for Smart Printer; 1700 pieces on roll; stretchable 5 - 5.2 mm; plain; snap-on type; red



Item No.: 2009-145/000-024
Mini-WSB Inline; for Smart Printer; 1700 pieces on roll; stretchable 5 - 5.2 mm; plain; snap-on type; violet



Item No.: 2009-145
Mini-WSB Inline; for Smart Printer; 1700 pieces on roll; stretchable 5 - 5.2 mm; plain; snap-on type; white



Item No.: 2009-145/000-002
Mini-WSB Inline; for Smart Printer; 1700 pieces on roll; stretchable 5 - 5.2 mm; plain; snap-on type; yellow



Item No.: 248-501/000-006
Mini-WSB marking card; as card; not stretchable; plain; snap-on type; blue



Item No.: 248-501/000-007
Mini-WSB marking card; as card; not stretchable; plain; snap-on type; gray



Item No.: 248-501/000-023
Mini-WSB marking card; as card; not stretchable; plain; snap-on type; green



Item No.: 248-501/000-017
Mini-WSB marking card; as card; not stretchable; plain; snap-on type; light green



Item No.: 248-501/000-012
Mini-WSB marking card; as card; not stretchable; plain; snap-on type; orange



Item No.: 248-501/000-005
Mini-WSB marking card; as card; not stretchable; plain; snap-on type; red



Item No.: 248-501/000-024
Mini-WSB marking card; as card; not stretchable; plain; snap-on type; violet



Item No.: 248-501
Mini-WSB marking card; as card; not stretchable; plain; snap-on type; white



Item No.: 248-501/000-002
Mini-WSB marking card; as card; not stretchable; plain; snap-on type; yellow



Item No.: 793-5501/000-006
WMB marking card; as card; for terminal block width 5 - 17.5 mm; stretchable 5 - 5.2 mm; plain; snap-on type; blue



Item No.: 793-5501/000-014
WMB marking card; as card; for terminal block width 5 - 17.5 mm; stretchable 5 - 5.2 mm; plain; snap-on type; brown



Item No.: 793-5501/000-007
WMB marking card; as card; for terminal block width 5 - 17.5 mm; stretchable 5 - 5.2 mm; plain; snap-on type; gray



Item No.: 793-5501/000-023
WMB marking card; as card; for terminal block width 5 - 17.5 mm; stretchable 5 - 5.2 mm; plain; snap-on type; green



Item No.: 793-5501/000-017
WMB marking card; as card; for terminal block width 5 - 17.5 mm; stretchable 5 - 5.2 mm; plain; snap-on type; light green



Item No.: 793-5501/000-012
WMB marking card; as card; for terminal block width 5 - 17.5 mm; stretchable 5 - 5.2 mm; plain; snap-on type; orange



Item No.: 793-5501/000-005
WMB marking card; as card; for terminal block width 5 - 17.5 mm; stretchable 5 - 5.2 mm; plain; snap-on type; red



Item No.: 793-5501/000-024
WMB marking card; as card; for terminal block width 5 - 17.5 mm; stretchable 5 - 5.2 mm; plain; snap-on type; violet

Item No.: 793-5501
WMB marking card; as card; for terminal block width 5 - 17.5 mm; stretchable 5 - 5.2 mm; plain; snap-on type; white



Item No.: 793-5501/000-002
WMB marking card; as card; for terminal block width 5 - 17.5 mm; stretchable 5 - 5.2 mm; plain; snap-on type; yellow



Item No.: 2009-115/000-006
WMB-Inline; for Smart Printer; 1500 pieces on roll; stretchable 5 - 5.2 mm; plain; snap-on type; blue



Item No.: 2009-115/000-007
WMB-Inline; for Smart Printer; 1500 pieces on roll; stretchable 5 - 5.2 mm; plain; snap-on type; gray



Item No.: 2009-115/000-023
WMB-Inline; for Smart Printer; 1500 pieces on roll; stretchable 5 - 5.2 mm; plain; snap-on type; green



Item No.: 2009-115/000-017
WMB-Inline; for Smart Printer; 1500 pieces on roll; stretchable 5 - 5.2 mm; plain; snap-on type; light green



Item No.: 2009-115/000-012
WMB-Inline; for Smart Printer; 1500 pieces on roll; stretchable 5 - 5.2 mm; plain; snap-on type; orange



Item No.: 2009-115/000-005
WMB-Inline; for Smart Printer; 1500 pieces on roll; stretchable 5 - 5.2 mm; plain; snap-on type; red



Item No.: 2009-115/000-024
WMB-Inline; for Smart Printer; 1500 pieces on roll; stretchable 5 - 5.2 mm; plain; snap-on type; violet



Item No.: 2009-115
WMB-Inline; for Smart Printer; 1500 pieces on roll; stretchable 5 - 5.2 mm; plain; snap-on type; white



Item No.: 2009-115/000-002
WMB-Inline; for Smart Printer; 1500 pieces on roll; stretchable 5 - 5.2 mm; plain; snap-on type; yellow

Continued on next page

1.2.7.3 Marker carrier



Item No.: 2002-161
Adaptor; gray



Item No.: 2009-198
Adaptor; gray

1.2.7.4 Marking strip



Item No.: 2009-110
Marking strips; for Smart Printer; on reel; not stretchable; plain; snap-on type; white

1.2.8 Plug

1.2.8.1 Component module with diode



Item No.: 2002-880/1000-411
Component plug; 2-pole; with diode 1N4007; 10.4 mm wide; Operating temperature 85°C max.; gray

1.2.8.2 Component module with LED



Item No.: 2002-880/1000-541
Component plug; 2-pole; LED (red); 10.4 mm wide; Operating temperature 85°C max.; gray



Item No.: 2002-880/1000-836
Component plug; 2-pole; LED (red); 10.4 mm wide; Operating temperature 85°C max.; gray



Item No.: 2002-880/1000-542
Component plug; 2-pole; LED (red); 10.4 mm wide; Operating temperature 85°C max.; multicoloured

1.2.8.3 Empty component plug housing



Item No.: 2002-880
Empty component plug housing; 10.4 mm wide; 2-pole; Type 4; gray

1.2.9 Push-in type wire jumper

1.2.9.1 Jumper



Item No.: 2009-414
Push-in type wire jumper; 1.5 mm²; insulated; 110 mm long; black



Item No.: 2009-414/000-005
Push-in type wire jumper; 1.5 mm²; insulated; 110 mm long; black



Item No.: 2009-416
Push-in type wire jumper; 1.5 mm²; insulated; 250 mm long; black



Item No.: 2009-414/000-006
Push-in type wire jumper; insulated; 110 mm long; black



Item No.: 2009-412
Push-in type wire jumper; insulated; 60 mm long; black

 Continued on next page

1.2.10 Screwless end stop

1.2.10.1 Mounting accessories



Item No.: 249-117
Screwless end stop; 10 mm wide; for DIN-rail 35 x 15 and 35 x 7.5; gray



Item No.: 249-116
Screwless end stop; 6 mm wide; for DIN-rail 35 x 15 and 35 x 7.5; gray

1.2.11 Test and measurement

1.2.11.1 Testing accessories



Item No.: 2002-560
Modular TOPJOB®S connector; modular; for jumper contact slot; 10-pole; gray



Item No.: 2002-511
Modular TOPJOB®S connector; modular; for jumper contact slot; 1-pole; gray



Item No.: 2002-552
Modular TOPJOB®S connector; modular; for jumper contact slot; 2-pole; gray



Item No.: 2002-553
Modular TOPJOB®S connector; modular; for jumper contact slot; 3-pole; gray



Item No.: 2002-554
Modular TOPJOB®S connector; modular; for jumper contact slot; 4-pole; gray



Item No.: 2002-555
Modular TOPJOB®S connector; modular; for jumper contact slot; 5-pole; gray



Item No.: 2002-556
Modular TOPJOB®S connector; modular; for jumper contact slot; 6-pole; gray



Item No.: 2002-557
Modular TOPJOB®S connector; modular; for jumper contact slot; 7-pole; gray



Item No.: 2002-558
Modular TOPJOB®S connector; modular; for jumper contact slot; 8-pole; gray



Item No.: 2002-559
Modular TOPJOB®S connector; modular; for jumper contact slot; 9-pole; gray



Item No.: 2002-549
Spacer module; modular; e.g., for bridging commoned terminal blocks; gray

Item No.: 2009-174
Test plug adapter; for 4 mm Ø test plugs; for testing TOPJOB®S rail-mounted terminal blocks; gray



Item No.: 2009-182
Testing tap; for max. 2.5 mm²; tool-free connection for individual test wires 0.08 - 2.5 mm; gray



Item No.: 2002-649
TOPJOB®S L-type spacer module; modular; e.g., for bridging commoned terminal blocks; gray

1.2.12 Tool

1.2.12.1 Operating tool



Item No.: 210-658
Operating tool; Blade: 3.5 x 0.5 mm; with a partially insulated shaft; angled; short; multicoloured



Item No.: 210-720
Operating tool; Blade: 3.5 x 0.5 mm; with a partially insulated shaft; multicoloured

Installation Notes

Conductor termination

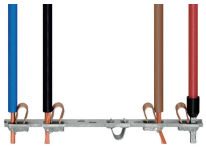

All conductor types at a glance



Push-in termination of solid and ferruled conductors



Insert fine-stranded conductors via operating tool.



Removing all conductors via operating tool.

Commoning

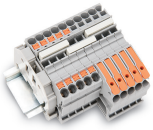

Insert a push-in type jumper bar and push down until it hits the backstop.



Commoning with step-down jumpers.



Step-down jumper (2006-499) commons 6/4 mm² (10/12 AWG) terminal blocks (2206/2204 Series) with 4/2.5/1.5 mm² (AWG 12/14/16) terminal blocks (2204/2202/2201 Series).

Testing



Testing with a 2 mm Ø test plug (max. 42 V).

Marking

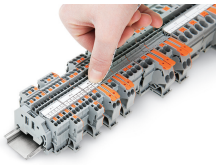

Snapping a marking strip into a marker slot.

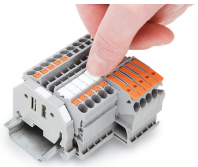

Snapping a marking strip into the marker slot.