Data Sheet | Item Number: 2202-1611/1000-836

2-conductor fuse terminal block; with pivoting fuse holder; with end plate; for 5 x 20 mm miniature metric fuse; with push-button; with blown fuse indication by LED; 230 V; for DIN-rail 35 x 15 and 35 x 7.5; 2.5 mm²; Push-in CAGE CLAMP®; 2,50 mm²; gray

https://www.wago.com/2202-1611/1000-836

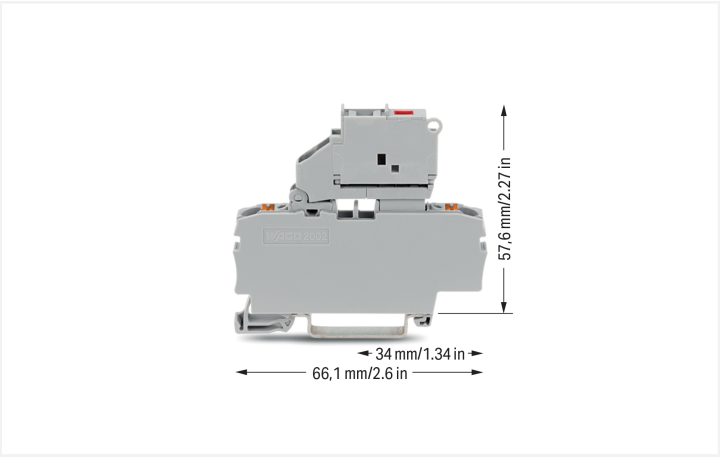

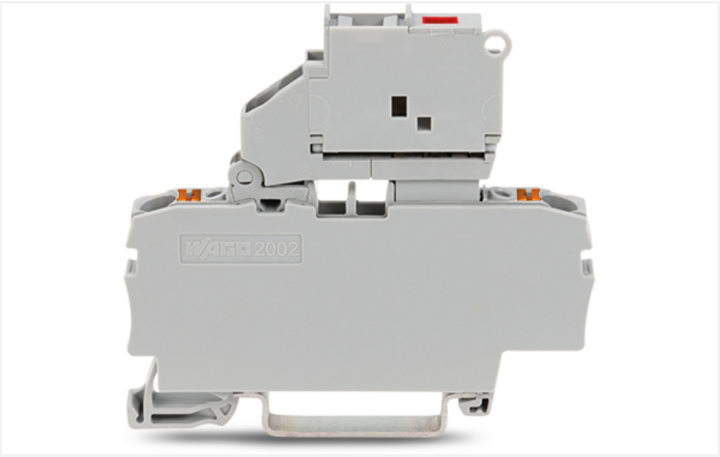

Color: gray

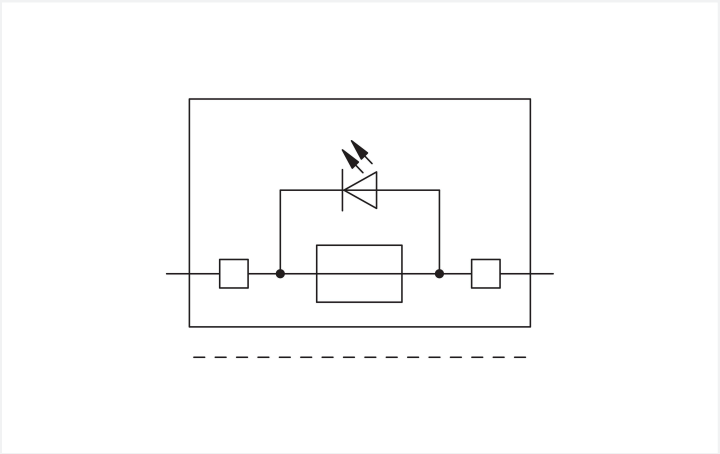

Fuse terminal block, 2202 Series, push-button

Our fuse terminal block (item number 2202-1611/1000-836) makes connecting wires quick and easy. Conductors can only be connected to this fuse terminal block if their strip length is between 10 and 12 mm . This product features conductor terminals and utilizes Push-in CAGE CLAMP®. Our Push-in CAGE CLAMP® is a universal, maintenance-free connection solution for all conductor types, offering a key advantage: It allows direct insertion of both solid and fine-stranded conductors with ferrules without needing tools. No preparation is required; for example, crimping the conductor's ferrule is not necessary. This fuse terminal block is suitable for conductor cross sections ranging from 0.25 mm² to 4 mm².

This product is designed for specific Ex applications (please refer to the product datasheet).

Notes

Safety Information	The 2 mm test slot is only approved for high impedance measurement up to max. 100 mA.

Electrical data

Ratings per	IEC/EN 60947-7-3		
Overvoltage category	III	III	II
Pollution degree	3	2	2
Nominal voltage	250 V	-	-
Rated impulse withstand voltage	6 kV	-	-
Rated current	6.3 A	-	-

Ratings per IEC/EN – Notes	
Ratings (note)	Electrical ratings are given by the fuse and blown fuse indication.
Rated current (note)	Leakage current in case of a blown fuse: LED 2 mA

Approvals per	UL 1059		
Use group	B	C	D
Rated voltage	250 V	250 V	250 V
Rated current	10 A	10 A	-

Approvals per	CSA 22.2 No 158		
Use group	B	C	D
Rated voltage	250 V	250 V	250 V
Rated current	10 A	10 A	10 A

Ex information

Reference to hazardous areas	See “Downloads – Documentation – Additional Information: Technical Section; Technical Explications”
Ratings per	ATEX: PTB 20 ATEX 1007 U / IECEx: PTB 20.0013U (Ex ec IIC Gc)
Rated voltage EN (Ex e II)	275 V
Rated current (Ex e II)	6.3 A

Power Loss

Power loss $P_{loss\,(max.)}$ (note)	When selecting glass cartridge fuses, make sure that the maximum power loss listed below is not exceeded. The power loss is determined according to IEC or EN 60947-7-3/VDE 0611-6 at 23°C. The temperature rise of the terminal block must be checked according to their application and mounting. Higher ambient temperatures represent an additional impact on miniature fuses. Therefore, in such applications, the rated current must be reduced if necessary. More details are available from the manufacturers.
Maximum power loss P_{loss} of fuse insert for overload and short-circuit protection (individual arrangement)	1.6 W
Maximum power loss P_{loss} of fuse insert for overload and short-circuit protection (block arrangement)	1.6 W
Maximum power loss P_{loss} of fuse insert for short-circuit protection (individual arrangement)	2.5 W
Power loss P_{loss} (max.) of fuse cartridge for short-circuit protection (block arrangement)	2.5 W

General information

Fuse receptacle	pivoting
Fuse type	Cylindrical fuse; 5 x 20 mm
Wiring direction	Front-entry wiring

Connection Data

Clamping units	2
Total number of potentials	1
Number of levels	1
Number of jumper slots	2

Connection 1

Connection technology	Push-in CAGE CLAMP®
Actuation type	Push-button
Connectable conductor materials	Copper
Nominal cross-section	2.5 mm²
Solid conductor	0.25 … 4 mm² / 22 … 12 AWG
Solid conductor; push-in termination	0.75 … 4 mm² / 18 … 12 AWG
Fine-stranded conductor	0.25 … 4 mm² / 22 … 12 AWG

Continued on next page

Connection 1

Fine-stranded conductor; with insulated ferrule	0.25 … 2.5 mm² / 22 … 14 AWG
Fine-stranded conductor; with ferrule; push-in termination	1 … 2.5 mm² / 18 … 14 AWG
Note (conductor cross-section)	Depending on the conductor characteristic, a conductor with a smaller cross-section can also be inserted via push-in termination.
Strip length	10 … 12 mm / 0.39 … 0.47 inches
Wiring direction	Front-entry wiring

Physical data

Width	6.2 mm / 0.244 inches
Height	66.1 mm / 2.602 inches
Depth from upper-edge of DIN-rail	57.6 mm / 2.268 inches

Mechanical data

Mounting type	DIN-35 rail
Marking level	Center/side marking

Material data

Note (material data)	Information on material specifications can be found here
Color	gray
Material group	I
Insulation material (main housing)	Polyamide (PA66)
Flammability class per UL94	V0
Fire load	0.256 MJ
Actuator color	orange
Weight	13.8 g

Environmental requirements

Processing temperature	-35 … +85 °C
Continuous operating temperature	-60 … +105 °C

Commercial data

PU (SPU)	50 pcs
Packaging type	Box
Country of origin	DE
GTIN	4055143907934
Customs tariff number	85369095000

Continued on next page

Product Classification

UNSPSC	39121410
ETIM 9.0	EC000899
ETIM 10.0	EC000899
ECCN	NO US CLASSIFICATION

Environmental Product Compliance

RoHS Compliance Status	Compliant,No Exemption
SCIP notification number (Austria)	dd2e96f2-097e-4a38-bd2d-bcb513d734ce
SCIP notification number (Belgium)	0b4aa7cf-5a14-4ac9-af22-16248caa3027
SCIP notification number (Bulgaria)	91379ea5-d2ca-41fd-bc92-7dd18fd1e62f
SCIP notification number (Czech Republic)	aabf4f7f-0a69-4623-b438-b62019014a5b
SCIP notification number (Denmark)	204bb77c-c2d6-4c36-bcfe-4e1964fe0ae7
SCIP notification number (Finland)	93a1eb2a-ea30-4a35-82bd-5dbfd6522202
SCIP notification number (France)	3be3970c-9e94-4657-8eb5-6d8abc4b50be
SCIP notification number (Germany)	61ffff3c-eb51-46f9-a925-5414761239e5
SCIP notification number (Hungary)	93e51129-8924-4e36-8229-12bf91ecb4a7
SCIP notification number (Italy)	f6028c8f-8d22-4823-887f-402a2c557c7c
SCIP notification number (Netherlands)	25da6c9f-6d4b-4b94-8e2c-74b4c4f72fd8
SCIP notification number (Poland)	126e62c1-a1e0-4a58-ad91-102427e5e15e
SCIP notification number (Romania)	00243524-62df-4a28-a205-d0f6970db461
SCIP notification number (Sweden)	363474a3-37b0-4a95-8f12-53b0fbd29e03

Approvals / Certificates

General approvals

Approval	Standard	Certificate Name
CCA DEKRA Certification B.V.	EN 60947	NTR NL-8032
CSA CSA Group	C22.2	70173745
DEKRA DEKRA Certification B.V.	EN 60947	71-147887
KEMA/KEUR DEKRA Certification B.V.	EN 60947	71-137338
UL Underwriters Laboratories Inc.	UL 1059	UL-CA-L45172-6189178-11508102-1

Approvals for hazardous areas

Approval	Standard	Certificate Name
AEx Underwriters Laboratories Inc.	UL 60079	E185892 (AEx eb IIC resp. Ex eb IIC)
ATEX Physikalisch Technische Bundesanstalt	EN IEC 60079-0	PTB 20 ATEX 1007U (II 3 G Ex ec IIC Gc)
CCC CNEX	-	2020312313000288 (Ex ec IIC Gc)
IECEx Physikalisch Technische Bundesanstalt	IEC 60079	IECEx PTB 20.0013U (Ex ec IIC Gc)

Declarations of conformity and manufacturer's declarations

Approval	Standard	Certificate Name
ATEX-Attestation of Conformity WAGO GmbH & Co. KG	-	-
EU-Declaration of Conformity WAGO GmbH & Co. KG	-	-
UK-Declaration of Conformity WAGO GmbH & Co. KG	-	-

Continued on next page

Downloads

Environmental Product Compliance

Compliance Search

Environmental Product Compliance 2202-1611/1000-836

Documentation

Bid Text

2202-1611/1000-836	20.05.2019	xml 4.31 KB
2202-1611/1000-836	20.05.2019	docx 15.58 KB

CAD/CAE-Data

CAD data

2D/3D Models 2202-1611/1000-836

1 Compatible Products

1.1 Required Accessories

1.1.1 End plate

1.1.1.1 End plate



Item No.: 2002-991
End plate for fuse terminal blocks; 2 mm thick; gray



Item No.: 2002-992
End plate for fuse terminal blocks; 2 mm thick; orange



Item No.: 209-191
Separator for Ex e/Ex i applications; 3 mm thick; 120 mm wide; orange

1.2 Optional Accessories

1.2.1 DIN-rail

1.2.1.1 Mounting accessories



Item No.: 210-196
Aluminum carrier rail; 35 x 8.2 mm; 1.6 mm thick; 2 m long; unslotted; similar to EN 60715; silver-colored



Item No.: 210-198
Copper carrier rail; 35 x 15 mm; 2.3 mm thick; 2 m long; unslotted; according to EN 60715; copper-colored



Item No.: 210-508
Steel carrier rail; 35 x 15 mm; 1.5 mm thick; 2 m long; slotted; galvanized; similar to EN 60715; silver-colored



Item No.: 210-197
Steel carrier rail; 35 x 15 mm; 1.5 mm thick; 2 m long; slotted; similar to EN 60715; silver-colored



Item No.: 210-506
Steel carrier rail; 35 x 15 mm; 1.5 mm thick; 2 m long; unslotted; galvanized; similar to EN 60715; silver-colored



Item No.: 210-114
Steel carrier rail; 35 x 15 mm; 1.5 mm thick; 2 m long; unslotted; similar to EN 60715; silver-colored



Item No.: 210-118
Steel carrier rail; 35 x 15 mm; 2.3 mm thick; 2 m long; unslotted; according to EN 60715; silver-colored



Item No.: 210-115
Steel carrier rail; 35 x 7.5 mm; 1 mm thick; 2 m long; slotted; according to EN 60715; "Hole width 18 mm; silver-colored

1.2.1.1 Mounting accessories



Item No.: 210-112
Steel carrier rail; 35 x 7.5 mm; 1 mm thick; 2 m long; slotted; according to EN 60715; "Hole width 25 mm; silver-colored



Item No.: 210-504
Steel carrier rail; 35 x 7.5 mm; 1 mm thick; 2 m long; slotted; galvanized; according to EN 60715; silver-colored



Item No.: 210-113
Steel carrier rail; 35 x 7.5 mm; 1 mm thick; 2 m long; unslotted; according to EN 60715; silver-colored



Item No.: 210-505
Steel carrier rail; 35 x 7.5 mm; 1 mm thick; 2 m long; unslotted; galvanized; according to EN 60715; silver-colored

1.2.2 Ferrule

1.2.2.1 Ferrule

Item No.: 216-241
Ferrule; Sleeve for 0.5 mm² / 20 AWG; insulated; electro-tin plated; electrolytic copper; gastight crimped; acc. to DIN 46228, Part 4/09.90; white

Item No.: 216-242
Ferrule; Sleeve for 0.75 mm² / 18 AWG; insulated; electro-tin plated; electrolytic copper; gastight crimped; acc. to DIN 46228, Part 4/09.90; gray

Item No.: 216-262
Ferrule; Sleeve for 0.75 mm² / 18 AWG; insulated; electro-tin plated; electrolytic copper; gastight crimped; acc. to DIN 46228, Part 4/09.90; gray

Item No.: 216-243
Ferrule; Sleeve for 1 mm² / AWG 18; insulated; electro-tin plated; electrolytic copper; gastight crimped; acc. to DIN 46228, Part 4/09.90; red

Item No.: 216-263
Ferrule; Sleeve for 1 mm² / AWG 18; insulated; electro-tin plated; electrolytic copper; gastight crimped; acc. to DIN 46228, Part 4/09.90; red



Item No.: 216-244
Ferrule; Sleeve for 1.5 mm² / AWG 16; insulated; electro-tin plated; electrolytic copper; gastight crimped; acc. to DIN 46228, Part 4/09.90; black



Item No.: 216-264
Ferrule; Sleeve for 1.5 mm² / AWG 16; insulated; electro-tin plated; electrolytic copper; gastight crimped; acc. to DIN 46228, Part 4/09.90; black



Item No.: 216-246
Ferrule; Sleeve for 2.5 mm² / AWG 14; insulated; electro-tin plated; electrolytic copper; gastight crimped; acc. to DIN 46228, Part 4/09.90; blue



Item No.: 216-266
Ferrule; Sleeve for 2.5 mm² / AWG 14; insulated; electro-tin plated; electrolytic copper; gastight crimped; acc. to DIN 46228, Part 4/09.90; blue

1.2.3 Installation

1.2.3.1 Cover

Item No.: 709-156
Cover; Type 3; suitable for cover carrier, type 3; 1 m long; transparent

1.2.3.2 Cover carrier



Item No.: 709-169
Cover carrier; Type 3; incl. fixing/retaining screws and knurled nut; suitable for 279 to 282 and 880 Series rail-mounted terminal blocks; suitable for 264 Series miniature rail-mounted terminal blocks; suitable for 270 Series sensor and actuator terminal blocks; gray

1.2.4 Insulation stop

1.2.4.1 Insulation stop



Item No.: 2002-171
Insulation stop; 0.25 - 0.5 mm²; 5 pieces/ strip; light gray



Item No.: 2002-172
Insulation stop; 0.75 - 1 mm²; 5 pieces/strip; dark gray

1.2.5 Jumper

1.2.5.1 Jumper



Item No.: 2004-406/020-000
Delta jumper; insulated; light gray



Item No.: 2004-410
Jumper; 10-way; insulated; light gray

Item No.: 2004-402
Jumper; 2-way; insulated; light gray



Item No.: 2004-403
Jumper; 3-way; insulated; light gray



Item No.: 2004-404
Jumper; 4-way; insulated; light gray



Item No.: 2004-405
Jumper; 5-way; insulated; light gray



Item No.: 2004-406
Jumper; 6-way; insulated; light gray



Item No.: 2004-407
Jumper; 7-way; insulated; light gray



Item No.: 2004-408
Jumper; 8-way; insulated; light gray



Item No.: 2004-409
Jumper; 9-way; insulated; light gray

Item No.: 2004-440
Jumper; from 1 to 10; insulated; light gray

Item No.: 2004-433
Jumper; from 1 to 3; insulated; light gray

Item No.: 2004-434
Jumper; from 1 to 4; insulated; light gray

Item No.: 2004-435
Jumper; from 1 to 5; insulated; light gray

Item No.: 2004-436
Jumper; from 1 to 6; insulated; light gray

Item No.: 2004-437
Jumper; from 1 to 7; insulated; light gray

Item No.: 2004-438
Jumper; from 1 to 8; insulated; light gray

Item No.: 2004-439
Jumper; from 1 to 9; insulated; light gray



Item No.: 2004-405/011-000
Star point jumper; 3-way; insulated; light gray



Item No.: 210-103
Wire commoning chain; 0.5 mm²; insulated; black



Item No.: 210-123
Wire commoning chain; insulated; blue

1.2.6 Locking system

1.2.6.1 Locking system



Item No.: 210-254
Interlocking link; mechanically locks multiple links; 1 m long; transparent

Continued on next page

1.2.7 Marking

1.2.7.1 Marker

Item No.: 2009-145/000-006
Mini-WSB Inline; for Smart Printer; 1700 pieces on roll; stretchable 5 - 5.2 mm; plain; snap-on type; blue

Item No.: 2009-145/000-007
Mini-WSB Inline; for Smart Printer; 1700 pieces on roll; stretchable 5 - 5.2 mm; plain; snap-on type; gray

Item No.: 2009-145/000-023
Mini-WSB Inline; for Smart Printer; 1700 pieces on roll; stretchable 5 - 5.2 mm; plain; snap-on type; green

Item No.: 2009-145/000-012
Mini-WSB Inline; for Smart Printer; 1700 pieces on roll; stretchable 5 - 5.2 mm; plain; snap-on type; orange

Item No.: 2009-145/000-005
Mini-WSB Inline; for Smart Printer; 1700 pieces on roll; stretchable 5 - 5.2 mm; plain; snap-on type; red

Item No.: 2009-145/000-024
Mini-WSB Inline; for Smart Printer; 1700 pieces on roll; stretchable 5 - 5.2 mm; plain; snap-on type; violet

Item No.: 2009-145
Mini-WSB Inline; for Smart Printer; 1700 pieces on roll; stretchable 5 - 5.2 mm; plain; snap-on type; white

Item No.: 2009-145/000-002
Mini-WSB Inline; for Smart Printer; 1700 pieces on roll; stretchable 5 - 5.2 mm; plain; snap-on type; yellow



Item No.: 248-501/000-006
Mini-WSB marking card; as card; not stretchable; plain; snap-on type; blue



Item No.: 248-501/000-007
Mini-WSB marking card; as card; not stretchable; plain; snap-on type; gray



Item No.: 248-501/000-023
Mini-WSB marking card; as card; not stretchable; plain; snap-on type; green



Item No.: 248-501/000-017
Mini-WSB marking card; as card; not stretchable; plain; snap-on type; light green



Item No.: 248-501/000-012
Mini-WSB marking card; as card; not stretchable; plain; snap-on type; orange



Item No.: 248-501/000-005
Mini-WSB marking card; as card; not stretchable; plain; snap-on type; red



Item No.: 248-501/000-024
Mini-WSB marking card; as card; not stretchable; plain; snap-on type; violet



Item No.: 248-501
Mini-WSB marking card; as card; not stretchable; plain; snap-on type; white



Item No.: 248-501/000-002
Mini-WSB marking card; as card; not stretchable; plain; snap-on type; yellow



Item No.: 793-5501/000-006
WMB marking card; as card; for terminal block width 5 - 17.5 mm; stretchable 5 - 5.2 mm; plain; snap-on type; blue



Item No.: 793-5501/000-014
WMB marking card; as card; for terminal block width 5 - 17.5 mm; stretchable 5 - 5.2 mm; plain; snap-on type; brown



Item No.: 793-5501/000-007
WMB marking card; as card; for terminal block width 5 - 17.5 mm; stretchable 5 - 5.2 mm; plain; snap-on type; gray



Item No.: 793-5501/000-023
WMB marking card; as card; for terminal block width 5 - 17.5 mm; stretchable 5 - 5.2 mm; plain; snap-on type; green



Item No.: 793-5501/000-017
WMB marking card; as card; for terminal block width 5 - 17.5 mm; stretchable 5 - 5.2 mm; plain; snap-on type; light green



Item No.: 793-5501/000-012
WMB marking card; as card; for terminal block width 5 - 17.5 mm; stretchable 5 - 5.2 mm; plain; snap-on type; orange



Item No.: 793-5501/000-005
WMB marking card; as card; for terminal block width 5 - 17.5 mm; stretchable 5 - 5.2 mm; plain; snap-on type; red



Item No.: 793-5501/000-024
WMB marking card; as card; for terminal block width 5 - 17.5 mm; stretchable 5 - 5.2 mm; plain; snap-on type; violet

Item No.: 793-5501
WMB marking card; as card; for terminal block width 5 - 17.5 mm; stretchable 5 - 5.2 mm; plain; snap-on type; white



Item No.: 793-5501/000-002
WMB marking card; as card; for terminal block width 5 - 17.5 mm; stretchable 5 - 5.2 mm; plain; snap-on type; yellow



Item No.: 2009-115/000-006
WMB-Inline; for Smart Printer; 1500 pieces on roll; stretchable 5 - 5.2 mm; plain; snap-on type; blue



Item No.: 2009-115/000-007
WMB-Inline; for Smart Printer; 1500 pieces on roll; stretchable 5 - 5.2 mm; plain; snap-on type; gray



Item No.: 2009-115/000-023
WMB-Inline; for Smart Printer; 1500 pieces on roll; stretchable 5 - 5.2 mm; plain; snap-on type; green



Item No.: 2009-115/000-017
WMB-Inline; for Smart Printer; 1500 pieces on roll; stretchable 5 - 5.2 mm; plain; snap-on type; light green



Item No.: 2009-115/000-012
WMB-Inline; for Smart Printer; 1500 pieces on roll; stretchable 5 - 5.2 mm; plain; snap-on type; orange



Item No.: 2009-115/000-005
WMB-Inline; for Smart Printer; 1500 pieces on roll; stretchable 5 - 5.2 mm; plain; snap-on type; red



Item No.: 2009-115/000-024
WMB-Inline; for Smart Printer; 1500 pieces on roll; stretchable 5 - 5.2 mm; plain; snap-on type; violet



Item No.: 2009-115
WMB-Inline; for Smart Printer; 1500 pieces on roll; stretchable 5 - 5.2 mm; plain; snap-on type; white



Item No.: 2009-115/000-002
WMB-Inline; for Smart Printer; 1500 pieces on roll; stretchable 5 - 5.2 mm; plain; snap-on type; yellow

Continued on next page

1.2.7.2 Marking strip



Item No.: 2009-110
Marking strips; for Smart Printer; on reel; not stretchable; plain; snap-on type; white

1.2.8 Screwless end stop

1.2.8.1 Mounting accessories



Item No.: 249-117
Screwless end stop; 10 mm wide; for DIN-rail 35 x 15 and 35 x 7.5; gray



Item No.: 249-116
Screwless end stop; 6 mm wide; for DIN-rail 35 x 15 and 35 x 7.5; gray

1.2.9 Test and measurement

1.2.9.1 Testing accessories



Item No.: 210-136
Test plug; 2 mm Ø; with 500 mm cable; red

1.2.10 Tool

1.2.10.1 Operating tool



Item No.: 210-658
Operating tool; Blade: 3.5 x 0.5 mm; with a partially insulated shaft; angled; short; multicoloured



Item No.: 210-720
Operating tool; Blade: 3.5 x 0.5 mm; with a partially insulated shaft; multicoloured

Installation Notes

Conductor termination

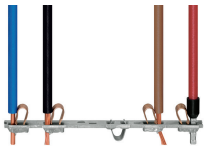

All conductor types at a glance



Push-in termination of solid and ferruled conductors



Push-in termination of solid and ferruled conductors



Insert fine-stranded conductors via operating tool.



Removing all conductors via operating tool.

Commoning

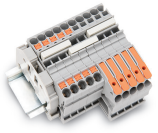

Insert a push-in type jumper bar and push down until it hits the backstop.

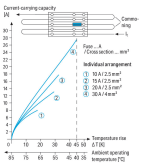

Application Notes on Terminal Blocks for Glass Cartridge Fuses
Diagram: “Individual Arrangement”

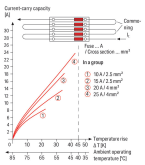

Application Notes on Terminal Blocks for Glass Cartridge Fuses
Diagram: “Block Arrangement”

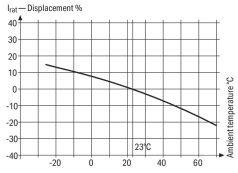

Application Notes on Terminal Blocks for Glass Cartridge Fuses
Nominal current ratings for fuse cartridges are defined differently in international standards. This is why the recommended continuous current-carrying capacity of the fuses is a max. 80% of their nominal current according to DIN 72581/Part 3 (for a surrounding air temperature of 23°C).
Selecting the correct fuse cartridge is important for product safety within applications, as well as for fuse cartridge service life and reliability. Fuse cartridges will only operate perfectly as protection components (break-off point) if they are properly selected and used as intended (i.e., according to the state of the technology and valid specifications, as well as data sheet characteristics), according to basic safety requirements (i.e., persons, animals and property must be protected against hazards).

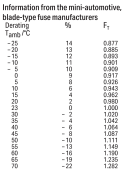
Information from the mini-automotive, blade-type fuse manufacturers

Derating T_{amb} °C	%	F_T
-25	14	0,877
-20	13	0,885
-15	12	0,893
-10	11	0,901
-5	10	0,909
0	9	0,917
5	8	0,926
10	6	0,943
15	4	0,962
20	2	0,980
23	0	1,000
30	- 2	1,020
35	- 4	1,042
40	- 6	1,064
45	- 8	1,087
50	- 10	1,111
55	- 13	1,140
60	- 16	1,176
65	- 19	1,235
70	- 22	1,282

Concerning product safety, fuse cartridges must generally be tested under both normal and faulty operating conditions within your application.

Marking

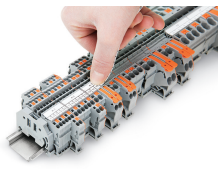

Snapping a marking strip into a marker slot.

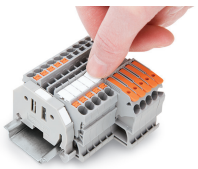

Snapping a marking strip into the marker slot.