Data Sheet | Item Number: 231-2103/037-000

2-conductor female connector; Push-in CAGE CLAMP®; 2.5 mm²; Pin spacing 5 mm; 3-pole; Lateral locking levers; gray

https://www.wago.com/231-2103/037-000

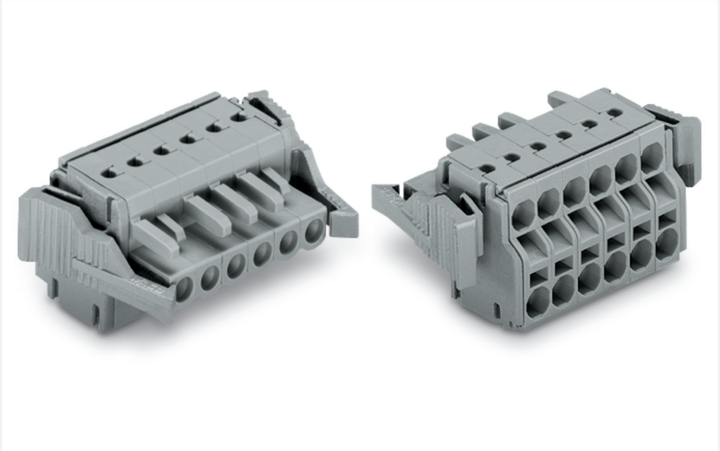

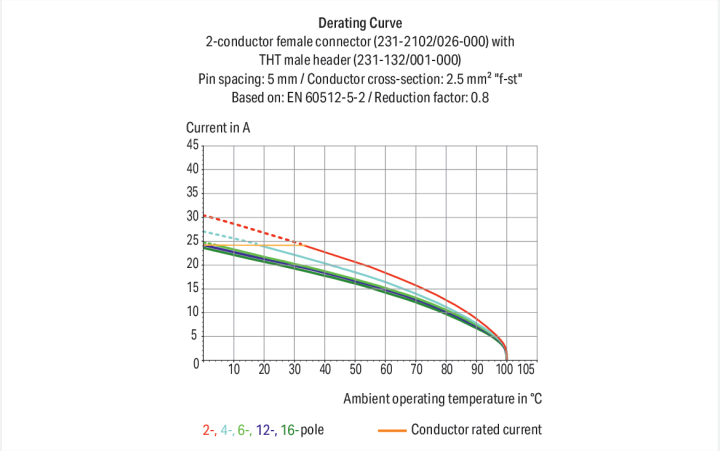

Color: gray

Similar to illustration

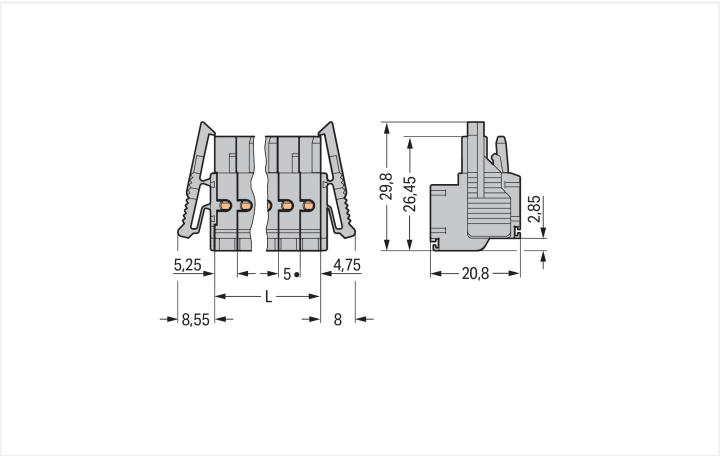

Dimensions in mm
L = (pole no. – 2) x pin spacing + 10 mm

Female connector, 231 Series, 0 ° conductor exit to connection direction

This female connector (item number 231-2103/037-000) simplifies electrical installations. Strip lengths must be between 9 and 10 mm when connecting conductors to this female connector. Featuring one conductor terminal along with Push-in CAGE CLAMP®, this product delivers reliable performance. Our Push-in CAGE CLAMP® is a universal, maintenance-free connection solution for all conductor types, boasting a key feature: It allows direct insertion of both solid and fine-stranded conductors with ferrules without needing tools. No preparation is required; for example, crimping the conductor's ferrule is not necessary. The item's dimensions are (31.55 x 20.8 x 29.8) mm (width x height x depth). This female connector is suitable for conductor cross sections ranging from 0.2 mm² to 2.5 mm². The contact surface is coated with tin.

Notes

Safety Information	The *MCS – MULTI CONNECTION SYSTEM* includes connectors without breaking capacity in accordance with DIN EN 61984. When used as intended, these connectors must not be connected/disconnected when live or under load.When used as intended, these connectors must not be connected/disconnected when live or under load. The circuit design should ensure header pins, which can be touched, are not live when unmated.
Variants:	Gold-plated or partially gold-plated contact surfaces Other versions (or variants) can be requested from WAGO Sales or configured at https://configurator.wago.com/.

Electrical data

Ratings per	IEC/EN 60664-1		
Overvoltage category	III	III	II
Pollution degree	3	2	2
Nominal voltage	320 V	320 V	630 V
Rated impulse withstand voltage	4 kV	4 kV	4 kV
Rated current	16 A	16 A	16 A

Approvals per	UL 1059		
Use group	B	C	D
Rated voltage	300 V	-	300 V
Rated current	20 A	-	10 A

Approvals per	UL 1977
Rated voltage	600 V
Rated current	20 A

Approvals per	CSA		
Use group	B	C	D
Rated voltage	300 V	-	300 V
Rated current	15 A	-	10 A

Connection Data

Clamping units	6
Total number of potentials	3
Number of connection types	1
Number of levels	1

Connection 1

Connection technology	Push-in CAGE CLAMP®
Actuation type	Operating tool
Actuation direction 1	Operation parallel to conductor entry
Solid conductor	0.2 … 2.5 mm² / 24 … 12 AWG
Fine-stranded conductor	0.2 … 2.5 mm² / 24 … 12 AWG
Fine-stranded conductor; with insulated ferrule	0.25 … 1.5 mm²
Fine-stranded conductor; with uninsulated ferrule	0.25 … 2.5 mm²
Strip length	9 … 10 mm / 0.35 … 0.39 inches
Pole number	3
Conductor entry direction to mating direction	0 °

Physical data

Pin spacing	5 mm / 0.197 inches
Width	31.55 mm / 1.242 inches
Height	20.8 mm / 0.819 inches
Depth	29.8 mm / 1.173 inches

Continued on next page

Mechanical data

Variable coding	Yes
Anti-rotation protection	Yes

Plug-in connection

Contact type (pluggable connector)	Female connector/socket
Connector (connection type)	for conductor
Mismating protection	No
Locking of plug-in connection	Locking lever

Material data

Note (material data)	Information on material specifications can be found here
Color	gray
Material group	I
Insulation material (main housing)	Polyamide (PA66)
Flammability class per UL94	V0
Clamping spring material	Chrome-nickel spring steel (CrNi)
Contact material	Copper alloy
Contact Plating	Tin
Fire load	0.139 MJ
Weight	8.4 g

Environmental requirements

Limit temperature range	-60 … +100 °C
Processing temperature	-35 … +60 °C

Commercial data

Product Group	3 (Multi Conn. System)
PU (SPU)	50 pcs
Packaging type	Box
Country of origin	PL
GTIN	4044918562942
Customs tariff number	85366990990

Product Classification

UNSPSC	39121409
eCl@ss 10.0	27-44-03-09
eCl@ss 9.0	27-44-03-09
ETIM 9.0	EC002638
ETIM 10.0	EC002638
ECCN	NO US CLASSIFICATION

Continued on next page

Environmental Product Compliance

RoHS Compliance Status	Compliant,No Exemption

Approvals / Certificates

General approvals

Approval	Standard	Certificate Name
CB DEKRA Certification B.V.	IEC 61984	NL-113351
KEMA/KEUR DEKRA Certification B.V.	EN 61984	71-130478 REV.1
UL UL International Germany GmbH	UL 1977	E45171
UL Underwriters Laboratories Inc.	UL 1059	E45172

Approvals for marine applications

Approval	Standard	Certificate Name
ABS American Bureau of Shipping	-	24-0095975-PDA
DNV DNV GL SE	-	TAE000016Z
PRS Polski Rejestr Statków	-	TE/1095/880590/23

Downloads

Environmental Product Compliance

Compliance Search

Environmental Product Compliance
231-2103/037-000

Documentation

Additional Information

Technical Section	03.04.2019	pdf 2027.26 KB

CAD/CAE-Data

CAD data

2D/3D Models
231-2103/037-000

CAE data

EPLAN Data Portal
231-2103/037-000

ZUKEN Portal
231-2103/037-000

Continued on next page

1 Compatible Products

1.1 System counterpart

1.1.1 Male connector/plug



Item No.: 231-603
1-conductor male connector; CAGE CLAMP®; 2.5 mm²; Pin spacing 5 mm; 3-pole; gray



Item No.: 231-433/001-000
THT male header; 1.0 x 1.0 mm solder pin; angled; Pin spacing 5 mm; 3-pole; gray



Item No.: 231-133/001-000
THT male header; 1.0 x 1.0 mm solder pin; straight; Pin spacing 5 mm; 3-pole; gray

1.2 Optional Accessories

1.2.1 Ferrule

1.2.1.1 Ferrule

Item No.: 216-241
Ferrule; Sleeve for 0.5 mm² / 20 AWG; insulated; electro-tin plated; electrolytic copper; gastight crimped; acc. to DIN 46228, Part 4/09.90; white

Item No.: 216-141
Ferrule; Sleeve for 0.5 mm² / 20 AWG; uninsulated; electro-tin plated; electrolytic copper; gastight crimped; acc. to DIN 46228, Part 1/08.92

Item No.: 216-242
Ferrule; Sleeve for 0.75 mm² / 18 AWG; insulated; electro-tin plated; electrolytic copper; gastight crimped; acc. to DIN 46228, Part 4/09.90; gray

Item No.: 216-142
Ferrule; Sleeve for 0.75 mm² / 18 AWG; uninsulated; electro-tin plated; electrolytic copper; gastight crimped; acc. to DIN 46228, Part 1/08.92

Item No.: 216-243
Ferrule; Sleeve for 1 mm² / AWG 18; insulated; electro-tin plated; electrolytic copper; gastight crimped; acc. to DIN 46228, Part 4/09.90; red

Item No.: 216-143
Ferrule; Sleeve for 1 mm² / AWG 18; uninsulated; electro-tin plated; electrolytic copper; gastight crimped; acc. to DIN 46228, Part 1/08.92



Item No.: 216-244
Ferrule; Sleeve for 1.5 mm² / AWG 16; insulated; electro-tin plated; electrolytic copper; gastight crimped; acc. to DIN 46228, Part 4/09.90; black

Item No.: 216-144
Ferrule; Sleeve for 1.5 mm² / AWG 16; uninsulated; electro-tin plated; electrolytic copper; gastight crimped; acc. to DIN 46228, Part 1/08.92; silver-colored



Item No.: 216-106
Ferrule; Sleeve for 2.5 mm² / AWG 14; uninsulated; electro-tin plated; silver-colored

1.2.2 Insulation stop

1.2.2.1 Insulation stop



Item No.: 231-670
Insulation stop; 0.08-0.2 mm² / 0.2 mm² "s"; white



Item No.: 231-671
Insulation stop; 0.25 - 0.5 mm²; light gray



Item No.: 231-672
Insulation stop; 0.75 - 1 mm²; dark gray

1.2.3 Marking

1.2.3.1 Marking strip

Item No.: 210-331/500-103
Marking strips; as a DIN A4 sheet; MARKED; 1-12 (300x); Height of marker strip: 2.3 mm/0.091 in; Strip length 182 mm; Horizontal marking; Self-adhesive; white



Item No.: 210-332/500-202
Marking strips; as a DIN A4 sheet; MARKED; 1-16 (160x); Height of marker strip: 3 mm; Strip length 182 mm; Horizontal marking; Self-adhesive; white

Item No.: 210-332/500-205
Marking strips; as a DIN A4 sheet; MARKED; 1-32 (80x); Height of marker strip: 3 mm; Strip length 182 mm; Horizontal marking; Self-adhesive; white



Item No.: 210-331/500-104
Marking strips; as a DIN A4 sheet; MARKED; 13-24 (300x); Height of marker strip: 2.3 mm/0.091 in; Strip length 182 mm; Horizontal marking; Self-adhesive; white

Continued on next page

1.2.3.1 Marking strip



Item No.: 210-332/500-204
Marking strips; as a DIN A4 sheet; MARKED; 17-32 (160x); Height of marker strip: 3 mm; Strip length 182 mm; Horizontal marking; Self-adhesive; white



Item No.: 210-332/500-206
Marking strips; as a DIN A4 sheet; MARKED; 33-48 (160x); Height of marker strip: 3 mm; Strip length 182 mm; Horizontal marking; Self-adhesive; white

1.2.4 Strain relief

1.2.4.1 Strain relief plate

Item No.: 734-328
Strain relief plate; for female and male connectors; 12.5 mm wide; 1 part; gray

1.2.5 Test and measurement

1.2.5.1 Testing accessories



Item No.: 231-661
Test plugs for female connectors; for 5 mm and 5.08 mm pin spacing; 2,50 mm²; light gray

1.2.6 Tool

1.2.6.1 Operating tool



Item No.: 210-720
Operating tool; Blade: 3.5 x 0.5 mm; with a partially insulated shaft; multicoloured



Item No.: 210-657
Operating tool; Blade: 3.5 x 0.5 mm; with a partially insulated shaft; short; multi-coloured



Item No.: 280-440
Operating tool; made of insulating material; 10-way; white



Item No.: 209-130
Operating tool; made of insulating material; 1-way; for 264 Series (1-/2-way), 280, 281 Series (up to 3-way); natural



Item No.: 280-432
Operating tool; made of insulating material; 2-way; white



Item No.: 280-433
Operating tool; made of insulating material; 3-way; white



Item No.: 280-434
Operating tool; made of insulating material; 4-way; white

Item No.: 280-435
Operating tool; made of insulating material; 5-way; gray



Item No.: 280-436
Operating tool; made of insulating material; 6-way; white



Item No.: 280-437
Operating tool; made of insulating material; 7-way; white



Item No.: 280-438
Operating tool; made of insulating material; 8-way; white

Continued on next page

Installation Notes

Conductor termination

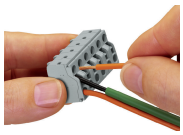

Operating Push-in CAGE CLAMP® is easy, fast and identical to that of CAGE CLAMP®. The screwdriver is fully inserted into the operating slot, holding Push-in CAGE CLAMP® open. After the conductor has been inserted into the clamping unit and the screwdriver been withdrawn, the conductor is clamped safely. Solid and fine-stranded conductors < 0.5 mm² (20 AWG) are terminated and removed using a screwdriver.

Conductor termination

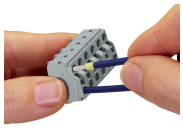

Solid conductors ≥ 0.5 mm² (20 AWG), as well as ferruled, fine-stranded conductors can be terminated by simply pushing them into unit. Integrated test ports allow touch contact with current bar via test probes in both horizontal and vertical directions.