Data Sheet | Item Number: 231-605/114-000

1-conductor male connector; CAGE CLAMP®; 2.5 mm²; Pin spacing 5 mm; 5-pole; Snap-in flange; gray

https://www.wago.com/231-605/114-000

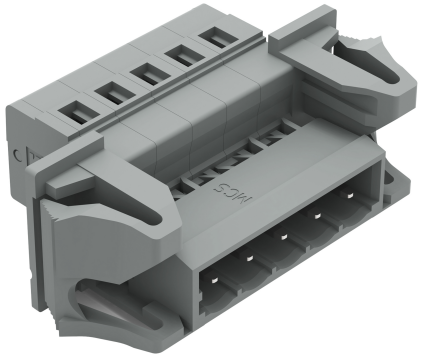

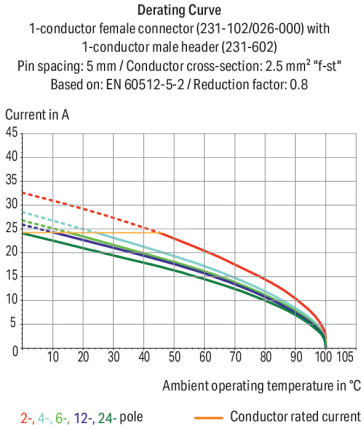

Color: gray

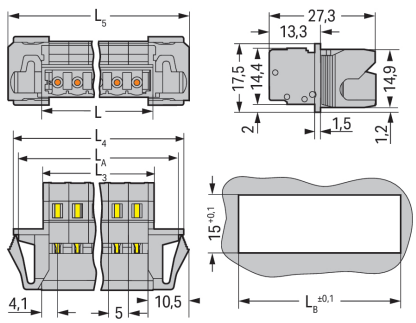

Dimensions in mm
L = (pole no. x pin spacing) + 3.2 mmL3 = L – 0.2 mmL4 = L3 + 15.2 mmL5 = L3 + 18 mmLA = L3 + 12.6 mmLB = L3 + 13.2 mm

Male connector, 231 Series, CAGE CLAMP®

This male connector (item number 231-605/114-000) simplifies electrical installations. Ensure that the strip lengths are between 8 and 9 mm when connecting conductors to this male connector. Featuring one conductor terminal along with CAGE CLAMP®, this product is highly versatile. Our CAGE CLAMP® connection provides a secure and maintenance-free way to connect all types of conductors. You do not need to prepare the conductor in any way, such as crimping ferrules. The item's dimensions are (46 x 17.5 x 27.5) mm (width x height x depth). This male connector is suitable for conductor cross sections ranging from 0.08 mm² to 2.5 mm².

Tin is used for coating the contact surfaces.

Notes

Safety Information	The *MCS – MULTI CONNECTION SYSTEM* includes connectors without breaking capacity in accordance with DIN EN 61984. When used as intended, these connectors must not be connected/disconnected when live or under load.When used as intended, these connectors must not be connected/disconnected when live or under load. The circuit design should ensure header pins, which can be touched, are not live when unmated.
Variants:	Other pole numbers Gold-plated or partially gold-plated contact surfaces Other versions (or variants) can be requested from WAGO Sales or configured at https://configurator.wago.com/.

Electrical data

Ratings per	IEC/EN 60664-1		
Overvoltage category	III	III	II
Pollution degree	3	2	2
Nominal voltage	320 V	320 V	630 V
Rated impulse withstand voltage	4 kV	4 kV	4 kV
Rated current	12 A	12 A	12 A

Approvals per	UL 1059		
Use group	B	C	D
Rated voltage	300 V	-	300 V
Rated current	15 A	-	10 A

Approvals per	UL 1977
Rated voltage	600 V
Rated current	15 A

Approvals per	CSA		
Use group	B	C	D
Rated voltage	300 V	-	300 V
Rated current	15 A	-	10 A

Connection Data

Clamping units	5
Total number of potentials	5
Number of connection types	1
Number of levels	1

Connection 1

Connection technology	CAGE CLAMP®
Actuation type	Operating tool
Actuation direction 1	Operation parallel to conductor entry
Actuation direction 2	Operation perpendicular to conductor entry
Solid conductor	0.08 … 2.5 mm² / 28 … 12 AWG
Fine-stranded conductor	0.08 … 2.5 mm² / 28 … 12 AWG
Fine-stranded conductor; with insulated ferrule	0.25 … 1.5 mm²
Fine-stranded conductor; with uninsulated ferrule	0.25 … 2.5 mm²
Strip length	8 … 9 mm / 0.31 … 0.35 inches
Pole number	5
Conductor entry direction to mating direction	0 °

Physical data

Pin spacing	5 mm / 0.197 inches
Width	46 mm / 1.811 inches
Height	17.5 mm / 0.689 inches
Depth	27.5 mm / 1.083 inches

Continued on next page

Mechanical data

Variable coding	Yes
Housing sheet thickness	0.5 … 3 mm / 0.02 … 0.118 inches
Mounting type	Snap-in flange
Mounting type	Feed-through mounting
Anti-rotation protection	Yes
Suitable for through-panel applications	Yes

Plug-in connection

Contact type (pluggable connector)	Male connector/plug
Connector (connection type)	for conductor
Mismating protection	No

Material data

Note (material data)	Information on material specifications can be found here
Color	gray
Material group	I
Insulation material (main housing)	Polyamide (PA66)
Flammability class per UL94	V0
Clamping spring material	Chrome-nickel spring steel (CrNi)
Contact material	Electrolytic copper (E_{Cu})
Contact Plating	Tin
Fire load	0.173 MJ
Weight	9.8 g

Environmental requirements

Limit temperature range	-60 … +100 °C
Processing temperature	-35 … +60 °C

Commercial data

Product Group	3 (Multi Conn. System)
PU (SPU)	50 pcs
Packaging type	Box
Country of origin	DE
GTIN	4050821216032
Customs tariff number	85366930000

Product Classification

UNSPSC	39121409
eCl@ss 10.0	27-44-03-09
eCl@ss 9.0	27-44-03-09
ETIM 9.0	EC002638
ETIM 10.0	EC002638
ECCN	NO US CLASSIFICATION

Continued on next page

Environmental Product Compliance

RoHS Compliance Status	Compliant,No Exemption

Approvals / Certificates

General approvals

Approval	Standard	Certificate Name
CB DEKRA Certification B.V.	IEC 61984	NL-113351
CSA DEKRA Certification B.V.	C22.2	LR 18677-25
KEMA/KEUR DEKRA Certification B.V.	EN 61984	71-130478 REV.1
UL Underwriters Laboratories Inc.	UL 1059	E45172
UR Underwriters Laboratories Inc.	UL 1977	E45171

Approvals for marine applications

Approval	Standard	Certificate Name
ABS American Bureau of Shipping	-	24-0095975-PDA
BV Bureau Veritas S.A.	IEC 60998	11915/E0 BV
DNV DNV GL SE	-	TAE000016Z
PRS Polski Rejestr Statków	-	TE/1095/880590/23

Downloads

Environmental Product Compliance

Compliance Search

Environmental Product Compliance
231-605/114-000

Documentation

Additional Information

Technical Section	03.04.2019	pdf 2027.26 KB

CAD/CAE-Data

CAD data

2D/3D Models
231-605/114-000

CAE data

ZUKEN Portal
231-605/114-000

Continued on next page

1 Compatible Products

1.1 System counterpart

1.1.1 Female connector/socket



Item No.: 231-105/026-000
1-conductor female connector; CAGE CLAMP®; 2.5 mm²; Pin spacing 5 mm; 5-pole; gray

1.2 Optional Accessories

1.2.1 Coding

1.2.1.1 Coding



Item No.: 231-129
Coding key; snap-on type; light gray



Item No.: 231-130
Coding key; snap-on type; light gray

1.2.2 Cover

1.2.2.1 Cover



Item No.: 231-668
Lockout caps; for covering unused clamping units; gray

1.2.3 Ferrule

1.2.3.1 Ferrule

Item No.: 216-301
Ferrule; Sleeve for 0.25 mm² / AWG 24; insulated; electro-tin plated; yellow

Item No.: 216-302
Ferrule; Sleeve for 0.34 mm² / 22 AWG; insulated; electro-tin plated; light turquoise

Item No.: 216-201
Ferrule; Sleeve for 0.5 mm² / 20 AWG; insulated; electro-tin plated; electrolytic copper; acc. to DIN 46228, Part 4/09.90; white



Item No.: 216-101
Ferrule; Sleeve for 0.5 mm² / AWG 22; uninsulated; electro-tin plated; silver-colored

Item No.: 216-202
Ferrule; Sleeve for 0.75 mm² / 18 AWG; insulated; electro-tin plated; gray

Item No.: 216-102
Ferrule; Sleeve for 0.75 mm² / 18 AWG; uninsulated; electro-tin plated; silver-colored

Item No.: 216-203
Ferrule; Sleeve for 1 mm² / AWG 18; insulated; electro-tin plated; red



Item No.: 216-103
Ferrule; Sleeve for 1 mm² / AWG 18; uninsulated; electro-tin plated

Item No.: 216-204
Ferrule; Sleeve for 1.5 mm² / AWG 16; insulated; electro-tin plated; black

Item No.: 216-104
Ferrule; Sleeve for 1.5 mm² / AWG 16; uninsulated; electro-tin plated; silver-colored

Continued on next page

1.2.4 Insulation stop

1.2.4.1 Insulation stop



Item No.: 231-670
Insulation stop; 0.08-0.2 mm² / 0.2 mm² "s"; white



Item No.: 231-671
Insulation stop; 0.25 - 0.5 mm²; light gray



Item No.: 231-672
Insulation stop; 0.75 - 1 mm²; dark gray

1.2.5 Jumper

1.2.5.1 Jumper



Item No.: 231-902
Jumper; for conductor entry; 2-way; insulated; gray



Item No.: 231-903
Jumper; for conductor entry; 3-way; insulated; gray



Item No.: 231-905
Jumper; for conductor entry; 5-way; insulated; gray

1.2.6 Strain relief

1.2.6.1 Strain relief housing



Item No.: 232-605
Strain relief housing; for female and male connectors; 2 parts; Pin spacing 5 mm; 5-pole; gray

1.2.7 Tool

1.2.7.1 Operating tool



Item No.: 231-231
Combination operating tool; red



Item No.: 210-720
Operating tool; Blade: 3.5 x 0.5 mm; with a partially insulated shaft; multicoloured



Item No.: 210-657
Operating tool; Blade: 3.5 x 0.5 mm; with a partially insulated shaft; short; multicoloured



Item No.: 209-132
Operating tool; for connecting comb-style jumper bar; made of insulating material; 2-way; natural



Item No.: 210-250
Operating tool; for MCS MINI and MIDI with CAGE CLAMP® connection; red



Item No.: 209-130
Operating tool; made of insulating material; 1-way; for 264 Series (1-/2-way), 280, 281 Series (up to 3-way); natural



Item No.: 231-291
Operating tool; made of insulating material; 1-way; loose; red



Item No.: 231-131
Operating tool; made of insulating material; 1-way; loose; white



Item No.: 280-432
Operating tool; made of insulating material; 2-way; white



Item No.: 280-433
Operating tool; made of insulating material; 3-way; white



Item No.: 280-434
Operating tool; made of insulating material; 4-way; white

Item No.: 280-435
Operating tool; made of insulating material; 5-way; gray



Item No.: 231-159
Operating tool; natural

Continued on next page

Installation Notes

Application

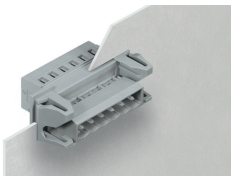

Male connector, with snap-in flanges, for feedthrough applications, for 0.5 … 2.5 mm plate thickness

Conductor termination

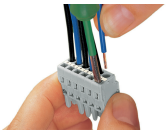

Inserting a conductor via 3.5 mm screwdriver – CAGE CLAMP® actuation parallel to conductor entry.

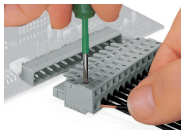

Inserting a conductor via 3.5 mm screwdriver – CAGE CLAMP® actuation perpendicular to conductor entry.

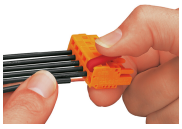

Inserting a conductor into CAGE CLAMP® unit via operating tool (231-291).



Inserting a conductor via operating tool.

Coding

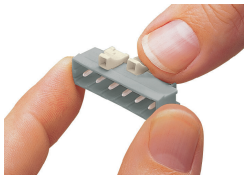

Coding a male header – fitting coding key(s).

Testing

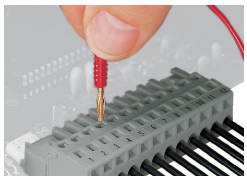

Testing – female connector with CAGE CLAMP®
Integrated test ports for testing perpendicular to conductor entry via 2 or 2.3 mm Ø test plug

Installation

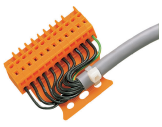

Male connector with strain relief plate

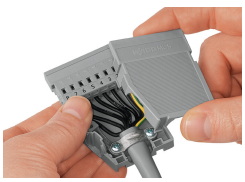

Strain relief housing shown with a male connector equipped with CAGE CLAMP®

Continued on next page

Marking

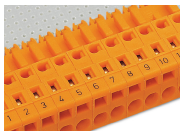

Labeling via direct marking or self-adhesive strips.