# Data Sheet | Item Number: 232-133/005-000

Female connector for rail-mount terminal blocks; 0.6 x 1 mm pins; straight; Pin spacing 5 mm; 3-pole; gray

https://www.wago.com/232-133/005-000

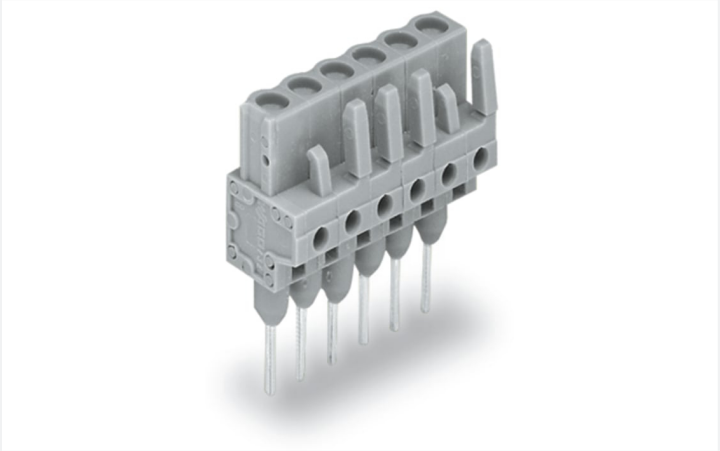

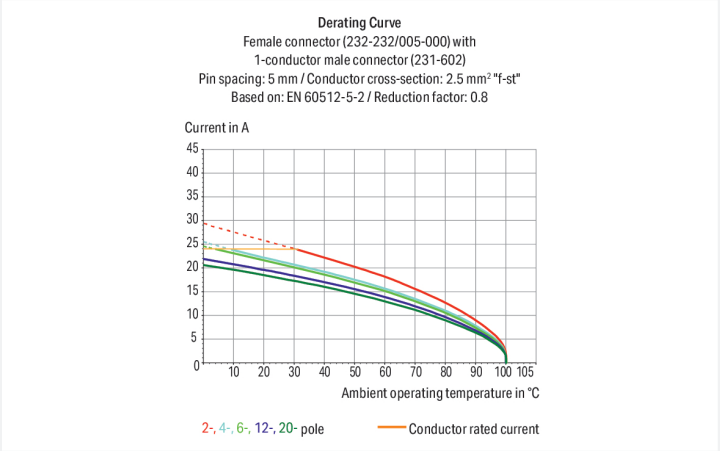


Color: gray

Similar to illustration

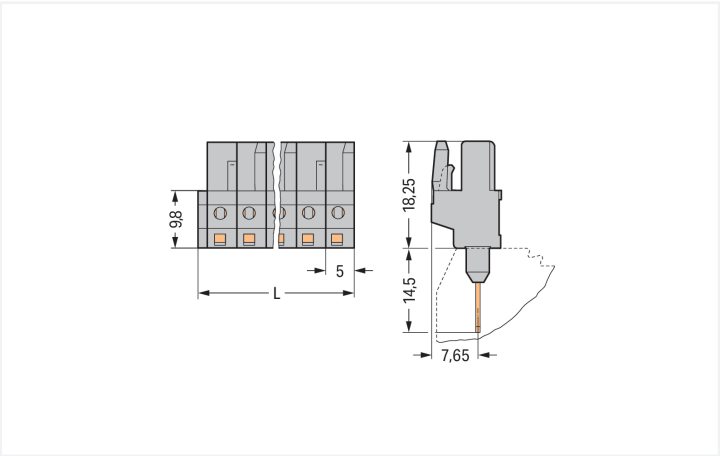


Dimensions in mm
L = (pole no. x pin spacing) + 1.5 mm2- to 3-pole female connectors – one latch only

Female connector, 232 Series, with 5 mm pin spacing

Our female connector (item number 232-133/005-000) simplifies electrical installations. The dimensions are (16.5 x 32.75 x 11.6) mm (width x height x depth).

Tin is used for coating the contact surfaces.

- The right solution for every wiring task
- Permanently secure connections
- Pin spacing: 5 mm
- 3 connection points
- Easy simplified wiring

## Notes

| | |
|---|---|
| Safety Information | The *MCS – MULTI CONNECTION SYSTEM* includes connectors without breaking capacity in accordance with DIN EN 61984. When used as intended, these connectors must not be connected/disconnected when live or under load.When used as intended, these connectors must not be connected/disconnected when live or under load. The circuit design should ensure header pins, which can be touched, are not live when unmated. |
| Variants: | Other pole numbers<br>Other versions (or variants) can be requested from WAGO Sales or configured at https://configurator.wago.com/. |

## Electrical data

| Ratings per | IEC/EN 60664-1 | | |
|---|---|---|---|
| Overvoltage category | III | III | II |
| Pollution degree | 3 | 2 | 2 |
| Nominal voltage | 320 V | 320 V | 630 V |
| Rated impulse withstand voltage | 4 kV | 4 kV | 4 kV |
| Rated current | 12 A | 12 A | 12 A |

| Approvals per | UL 1059 | | |
|---|---|---|---|
| Use group | B | C | D |
| Rated voltage | 300 V | - | 300 V |
| Rated current | 15 A | - | 10 A |

| Approvals per | UL 1977 |
|---|---|
| Rated voltage | 600 V |
| Rated current | 15 A |

| Approvals per | CSA | | |
|---|---|---|---|
| Use group | B | C | D |
| Rated voltage | 300 V | - | 300 V |
| Rated current | 15 A | - | 10 A |

## Connection Data

| | |
|---|---|
| Clamping units | 3 |
| Total number of potentials | 3 |
| Number of connection types | 1 |
| Number of levels | 1 |

### Connection 1

| | |
|---|---|
| Pole number | 3 |

## Physical data

| | |
|---|---|
| Pin spacing | 5 mm / 0.197 inches |
| Width | 16.5 mm / 0.65 inches |
| Height | 32.75 mm / 1.289 inches |
| Height from the surface | 18.25 mm / 0.719 inches |
| Depth | 11.6 mm / 0.457 inches |

## Mechanical data

| | |
|---|---|
| Variable coding | Yes |
| Anti-rotation protection | Yes |

## Plug-in connection

| | |
|---|---|
| Contact type (pluggable connector) | Female connector/socket |
| Connector (connection type) | for front-entry rail-mount terminal block |
| Mismating protection | No |
| Mating direction to the rail-mount terminal block | 90 ° |


Continued on next page

## Material data

| | |
|---|---|
| Note (material data) | Information on material specifications can be found here |
| Color | gray |
| Material group | I |
| Insulation material (main housing) | Polyamide (PA66) |
| Flammability class per UL94 | V0 |
| Contact material | Copper alloy |
| Contact Plating | Tin |
| Fire load | 0.052 MJ |
| Weight | 3.2 g |

## Environmental requirements

| | |
|---|---|
| Limit temperature range | -60 … +85 °C |
| Processing temperature | -35 … +60 °C |

## Commercial data

| | |
|---|---|
| Product Group | 3 (Multi Conn. System) |
| PU (SPU) | 100 pcs |
| Packaging type | Box |
| Country of origin | DE |
| GTIN | 4044918569545 |
| Customs tariff number | 85366990990 |

## Product Classification

| | |
|---|---|
| UNSPSC | 39121409 |
| eCl@ss 10.0 | 27-14-11-06 |
| eCl@ss 9.0 | 27-14-11-06 |
| ETIM 9.0 | EC001284 |
| ETIM 10.0 | EC001284 |
| ECCN | NO US CLASSIFICATION |

## Environmental Product Compliance

| | |
|---|---|
| RoHS Compliance Status | Compliant,No Exemption |

## Approvals / Certificates

### General approvals

| Approval | Standard | Certificate Name |
|---|---|---|
| CB<br>DEKRA Certification B.V. | IEC 61984 | NL-113351 |
| CSA<br>DEKRA Certification B.V. | C22.2 | 1466354 |
| KEMA/KEUR<br>DEKRA Certification B.V. | EN 61984 | 71-130478 REV.1 |
| UL<br>Underwriters Laboratories Inc. | UL 1977 | E45171 |

### Approvals for marine applications

| Approval | Standard | Certificate Name |
|---|---|---|
| BV<br>Bureau Veritas S.A. | IEC 60998 | 11915/E0 BV |


Continued on next page

## Downloads

### Environmental Product Compliance

**Compliance Search**

Environmental Product Compliance
232-133/005-000

### Documentation

**Additional Information**

| | | |
|---|---|---|
| Technical Section | 03.04.2019 | pdf<br>2027.26 KB |

### CAD/CAE-Data

**CAD data**

2D/3D Models
232-133/005-000

**CAE data**

EPLAN Data Portal
232-133/005-000

ZUKEN Portal
232-133/005-000

## 1 Compatible Products

### 1.1 System counterpart

#### 1.1.1 Male connector/plug



Item No.: 231-603
1-conductor male connector; CAGE CLAMP®; 2.5 mm²; Pin spacing 5 mm; 3-pole; gray

### 1.2 Optional Accessories

#### 1.2.1 Test and measurement

##### 1.2.1.1 Testing accessories



Item No.: 231-661
Test plugs for female connectors; for 5 mm and 5.08 mm pin spacing; 2,50 mm²; light gray