Data Sheet | Item Number: 232-235/005-000/039-000

Female connector for rail-mount terminal blocks; 0.6 x 1 mm pins; angled; Locking lever; Pin spacing 5 mm; 5-pole; gray

https://www.wago.com/232-235/005-000/039-000

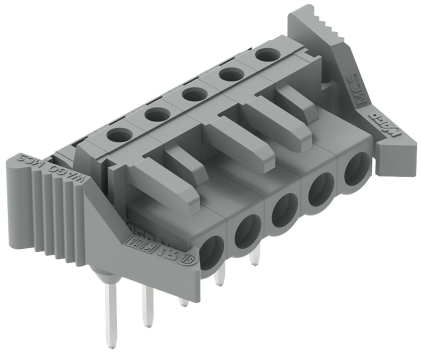

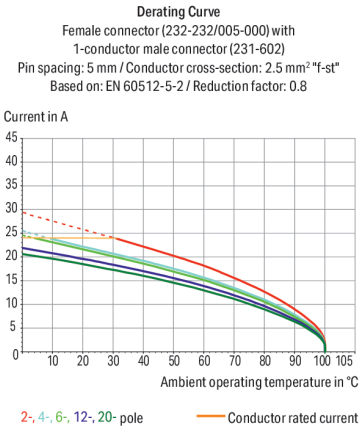

Color: gray

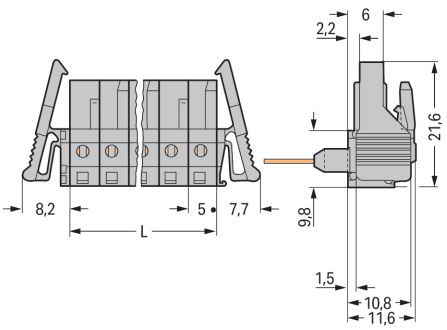

Dimensions in mm
L = pole no. x pin spacing2- to 3-pole female connectors – one latch only

Female connector, 232 Series, with 5 mm pin spacing

This female connector (item number 232-235/005-000/039-000) simplifies electrical installations. Dimensions: (40.9 x 26.1 x 11.6) mm (width x height x depth).

Tin is used for coating the contact surfaces.

Notes

Safety Information	The *MCS – MULTI CONNECTION SYSTEM* includes connectors without breaking capacity in accordance with DIN EN 61984. When used as intended, these connectors must not be connected/disconnected when live or under load.When used as intended, these connectors must not be connected/disconnected when live or under load. The circuit design should ensure header pins, which can be touched, are not live when unmated.
Variants:	Other pole numbers Other versions (or variants) can be requested from WAGO Sales or configured at https://configurator.wago.com/.

Electrical data

Ratings per	IEC/EN 60664-1		
Overvoltage category	III	III	II
Pollution degree	3	2	2
Nominal voltage	320 V	320 V	630 V
Rated impulse withstand voltage	4 kV	4 kV	4 kV
Rated current	12 A	12 A	12 A

Approvals per	UL 1059		
Use group	B	C	D
Rated voltage	300 V	-	300 V
Rated current	15 A	-	10 A

Approvals per	UL 1977
Rated voltage	600 V
Rated current	15 A

Approvals per	CSA		
Use group	B	C	D
Rated voltage	300 V	-	300 V
Rated current	15 A	-	10 A

Connection Data

Clamping units	5
Total number of potentials	5
Number of connection types	1
Number of levels	1

Connection 1

Pole number	5

Physical data

Pin spacing	5 mm / 0.197 inches
Width	40.9 mm / 1.61 inches
Height	26.1 mm / 1.028 inches
Height from the surface	11.6 mm / 0.457 inches
Depth	11.6 mm / 0.457 inches

Mechanical data

Variable coding	Yes
Anti-rotation protection	Yes

Plug-in connection

Contact type (pluggable connector)	Female connector/socket
Connector (connection type)	for front-entry rail-mount terminal block
Mismating protection	No
Locking of plug-in connection	Locking lever
Mating direction to the rail-mount terminal block	0 °

Continued on next page

Material data

Note (material data)	Information on material specifications can be found here
Color	gray
Material group	I
Insulation material (main housing)	Polyamide (PA66)
Flammability class per UL94	V0
Contact material	Copper alloy
Contact Plating	Tin
Fire load	0.106 MJ
Weight	6.1 g

Environmental requirements

Limit temperature range	-60 … +85 °C
Processing temperature	-35 … +60 °C

Commercial data

Product Group	3 (Multi Conn. System)
PU (SPU)	50 pcs
Packaging type	Box
Country of origin	DE
GTIN	4044918571999
Customs tariff number	85366990990

Product Classification

UNSPSC	39121409
eCl@ss 10.0	27-14-11-06
eCl@ss 9.0	27-14-11-06
ETIM 9.0	EC001284
ETIM 10.0	EC001284
ECCN	NO US CLASSIFICATION

Environmental Product Compliance

RoHS Compliance Status	Compliant,No Exemption

Approvals / Certificates

General approvals

Approval	Standard	Certificate Name
CSA DEKRA Certification B.V.	C22.2	1466354

Continued on next page

Downloads

Environmental Product Compliance

Compliance Search

Documentation

Additional Information

Technical Section	03.04.2019	pdf 2027.26 KB

CAD/CAE-Data

CAE data

1 Compatible Products

1.1 System counterpart

1.1.1 Male connector/plug



Item No.: 231-605
1-conductor male connector; CAGE CLAMP®; 2.5 mm²; Pin spacing 5 mm; 5-pole; gray

1.2 Optional Accessories

1.2.1 Test and measurement

1.2.1.1 Testing accessories



Item No.: 231-661
Test plugs for female connectors; for 5 mm and 5.08 mm pin spacing; 2,50 mm²; light gray