Data Sheet | Item Number: 232-564/007-000

Double pin header; DIN-35 rail mounting; 4-pole; Pin spacing 7.5 mm; gray

https://www.wago.com/232-564/007-000

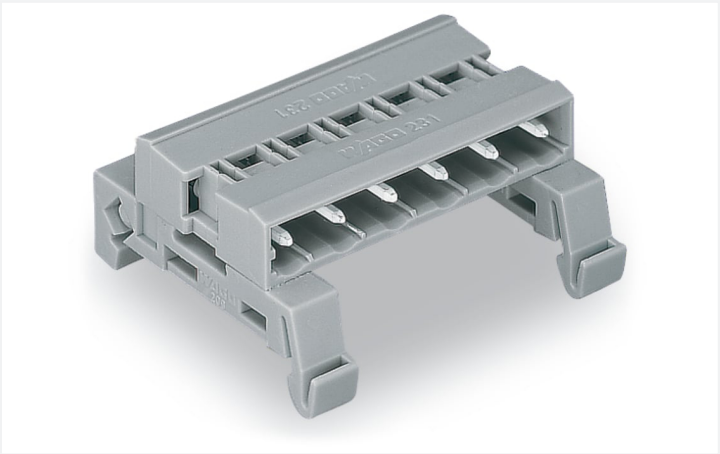

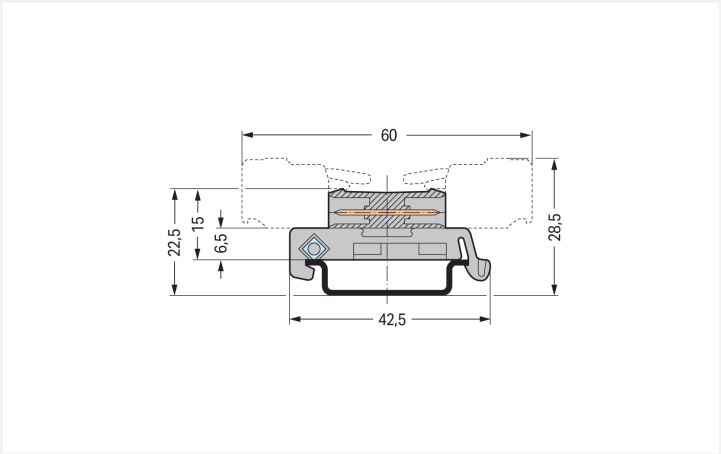

Color: gray

Similar to illustration

Dimensions in mm
Total length = (pole no. – 1) x pin spacing + 8.2 mm

Male connector, 232 Series, with 7.5 mm pin spacing

Our male connector (item number 232-564/007-000) ensures effortless electrical installations. The dimensions are (30.7 x 25.9 x 42.5) mm (width x height x depth).

Tin is used for coating the contact surfaces.

Notes

Safety Information	The *MCS – MULTI CONNECTION SYSTEM* includes connectors without breaking capacity in accordance with DIN EN 61984. When used as intended, these connectors must not be connected/disconnected when live or under load.When used as intended, these connectors must not be connected/disconnected when live or under load. The circuit design should ensure header pins, which can be touched, are not live when unmated.
Safety information 2	Notice: Male connectors must not be live when disconnected!
Variants:	Other pole numbers Other versions (or variants) can be requested from WAGO Sales or configured at https://configurator.wago.com/.

Electrical data

Ratings per	IEC/EN 60664-1		
Overvoltage category	III	III	II
Pollution degree	3	2	2
Nominal voltage	500 V	630 V	1000 V
Rated impulse withstand voltage	6 kV	6 kV	6 kV
Rated current	12 A	12 A	12 A

Approvals per	UL 1059		
Use group	B	C	D
Rated voltage	300 V	-	300 V
Rated current	15 A	-	10 A

Approvals per	UL 1977
Rated voltage	600 V
Rated current	15 A

Approvals per	CSA		
Use group	B	C	D
Rated voltage	300 V	-	300 V
Rated current	15 A	-	10 A

Continued on next page

Connection Data

Total number of potentials	4
Number of connection types	1
Number of levels	1

Connection 1

Pole number	4

Physical data

Pin spacing	7.5 mm / 0.295 inches
Width	30.7 mm / 1.209 inches
Height	25.9 mm
Height from the surface	6.5 mm
Height from upper-edge of DIN-rail	15 mm / 0.591 inches
Depth	42.5 mm / 1.673 inches

Mechanical data

Variable coding	Yes
Mounting type	DIN-35 rail
Mounting type	DIN-35 rail
Anti-rotation protection	Yes

Plug-in connection

Contact type (pluggable connector)	Male connector/plug
Connector (connection type)	for pluggable connector
Mismating protection	No

Material data

Note (material data)	Information on material specifications can be found here
Color	gray
Material group	I
Insulation material (main housing)	Polyamide (PA66)
Flammability class per UL94	V0
Contact material	Electrolytic copper (E_{Cu})
Contact Plating	Tin
Fire load	0.152 MJ
Weight	6.6 g

Environmental requirements

Limit temperature range	-60 … +100 °C
Processing temperature	-35 … +60 °C

Continued on next page

Commercial data

Product Group	3 (Multi Conn. System)
PU (SPU)	25 pcs
Packaging type	Box
Country of origin	DE
GTIN	4045454340308
Customs tariff number	85366930000

Product Classification

UNSPSC	39121409
eCl@ss 10.0	27-14-11-06
eCl@ss 9.0	27-14-11-06
ETIM 9.0	EC001284
ETIM 10.0	EC001284
ECCN	NO US CLASSIFICATION

Environmental Product Compliance

RoHS Compliance Status	Compliant,No Exemption

Approvals / Certificates

General approvals

Approval	Standard	Certificate Name
CB DEKRA Certification B.V.	IEC 61984	NL-113351
KEMA/KEUR DEKRA Certification B.V.	EN 61984	71-130478 REV.1
UR Underwriters Laboratories Inc.	UL 1977	E 45171
UR Underwriters Laboratories Inc.	UL 1059	E45172

Approvals for marine applications

Approval	Standard	Certificate Name
ABS American Bureau of Shipping	-	24-0095975-PDA
BV Bureau Veritas S.A.	IEC 60998	11915/E0 BV
DNV DNV GL SE	EN 60998	TAE000016Z

Downloads

Environmental Product Compliance

Compliance Search

Environmental Product Compliance
232-564/007-000

Continued on next page

Documentation

Additional Information

Technical Section	03.04.2019	pdf 2027.26 KB

CAD/CAE-Data

CAE data

EPLAN Data Portal
232-564/007-000

1 Compatible Products

1.1 System counterpart

1.1.1 Female connector/socket



Item No.: 231-204/026-000
1-conductor female connector; CAGE CLAMP®; 2.5 mm²; Pin spacing 7.5 mm; 4-pole; gray

1.2 Optional Accessories

1.2.1 Coding

1.2.1.1 Coding



Item No.: 231-130
Coding key; snap-on type; light gray

1.2.2 DIN-rail

1.2.2.1 Mounting accessories



Item No.: 210-196
Aluminum carrier rail; 35 x 8.2 mm; 1.6 mm thick; 2 m long; unslotted; similar to EN 60715; silver-colored



Item No.: 210-198
Copper carrier rail; 35 x 15 mm; 2.3 mm thick; 2 m long; unslotted; according to EN 60715; copper-colored



Item No.: 210-508
Steel carrier rail; 35 x 15 mm; 1.5 mm thick; 2 m long; slotted; galvanized; similar to EN 60715; silver-colored



Item No.: 210-197
Steel carrier rail; 35 x 15 mm; 1.5 mm thick; 2 m long; slotted; similar to EN 60715; silver-colored



Item No.: 210-506
Steel carrier rail; 35 x 15 mm; 1.5 mm thick; 2 m long; unslotted; galvanized; similar to EN 60715; silver-colored



Item No.: 210-114
Steel carrier rail; 35 x 15 mm; 1.5 mm thick; 2 m long; unslotted; similar to EN 60715; silver-colored



Item No.: 210-118
Steel carrier rail; 35 x 15 mm; 2.3 mm thick; 2 m long; unslotted; according to EN 60715; silver-colored



Item No.: 210-115
Steel carrier rail; 35 x 7.5 mm; 1 mm thick; 2 m long; slotted; according to EN 60715; "Hole width 18 mm; silver-colored



Item No.: 210-112
Steel carrier rail; 35 x 7.5 mm; 1 mm thick; 2 m long; slotted; according to EN 60715; "Hole width 25 mm; silver-colored



Item No.: 210-504
Steel carrier rail; 35 x 7.5 mm; 1 mm thick; 2 m long; slotted; galvanized; according to EN 60715; silver-colored



Item No.: 210-113
Steel carrier rail; 35 x 7.5 mm; 1 mm thick; 2 m long; unslotted; according to EN 60715; silver-colored



Item No.: 210-505
Steel carrier rail; 35 x 7.5 mm; 1 mm thick; 2 m long; unslotted; galvanized; according to EN 60715; silver-colored

Continued on next page

Installation Notes

Application

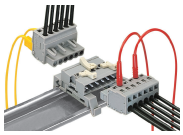

Angled female connector – straight female connector