# Data Sheet | Item Number: 232-764/039-000

THT female header; straight; Pin spacing 7.62 mm; 4-pole; Locking lever; 0.6 x 1.0 mm solder pin; orange

https://www.wago.com/232-764/039-000

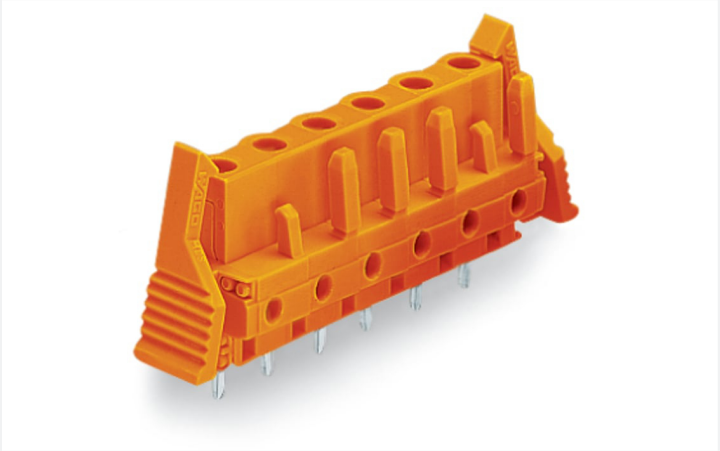

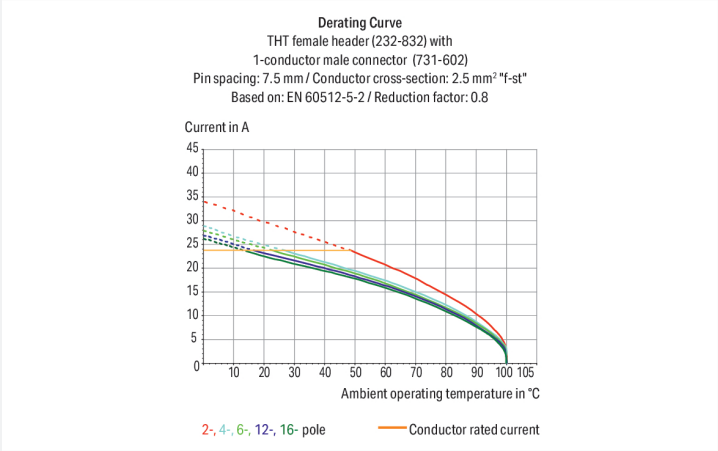


Color: orange

Similar to illustration

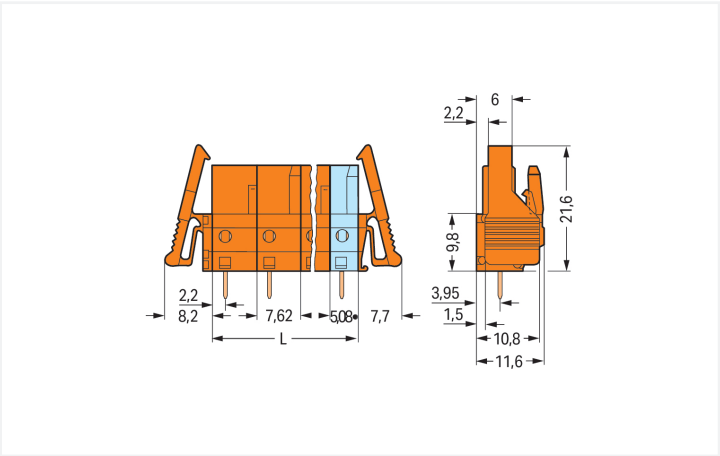


Dimensions in mm
L = (pole no. – 1) x pin spacing + 5.08 mm2- to 3-pole female connectors – one latch only

Female connector, 232 Series, orange

This female connector (item number 232-764/039-000) simplifies electrical installations. The item's dimensions are (43.84 x 23.25 x 11.6) mm (width x height x depth).

Tin is used for coating the contact surfaces. The pcb connector is designed for THT soldering.

## Notes

| | |
|---|---|
| Safety Information | The *MCS – MULTI CONNECTION SYSTEM* includes connectors without breaking capacity in accordance with DIN EN 61984. When used as intended, these connectors must not be connected/disconnected when live or under load.When used as intended, these connectors must not be connected/disconnected when live or under load. The circuit design should ensure header pins, which can be touched, are not live when unmated. |
| Variants: | Other pole numbers<br>3.8 mm pin projection for male headers with straight solder pins<br>Gold-plated or partially gold-plated contact surfaces<br>Other versions (or variants) can be requested from WAGO Sales or configured at https://configurator.wago.com/. |

## Electrical data

| Ratings per | IEC/EN 60664-1 | | |
|---|---|---|---|
| Overvoltage category | III | III | II |
| Pollution degree | 3 | 2 | 2 |
| Nominal voltage | 500 V | 630 V | 1000 V |
| Rated impulse withstand voltage | 6 kV | 6 kV | 6 kV |
| Rated current | 12 A | 12 A | 12 A |

| Approvals per | UL 1059 | | |
|---|---|---|---|
| Use group | B | C | D |
| Rated voltage | 300 V | - | 300 V |
| Rated current | 15 A | - | 10 A |

| Approvals per | CSA | | |
|---|---|---|---|
| Use group | B | C | D |
| Rated voltage | 300 V | - | 300 V |
| Rated current | 15 A | - | 10 A |

## Connection Data

| | |
|---|---|
| Clamping units | 4 |
| Total number of potentials | 4 |
| Number of connection types | 1 |
| Number of levels | 1 |

### Connection 1

| | |
|---|---|
| Pole number | 4 |

## Physical data

| | |
|---|---|
| Pin spacing | 7.62 mm / 0.3 inches |
| Width | 43.84 mm / 1.726 inches |
| Height | 23.25 mm / 0.915 inches |
| Height from the surface | 18.25 mm / 0.719 inches |
| Depth | 11.6 mm / 0.457 inches |
| Solder pin length | 5 mm |
| Solder pin dimensions | 0.6 x 1 mm |
| Drilled hole diameter | 1.3 $^{(+0.1)}$ mm |

## Mechanical data

| | |
|---|---|
| Variable coding | Yes |
| Anti-rotation protection | Yes |


Continued on next page

## Plug-in connection

| | |
|---|---|
| Contact type (pluggable connector) | Female connector/socket |
| Connector (connection type) | for PCB |
| Mismating protection | No |
| Mating direction to the PCB | 90 ° |
| Locking of plug-in connection | Locking lever |

## PCB contact

| | |
|---|---|
| PCB contact | THT |
| Solder pin arrangement | over the entire female connector (in-line) |
| Number of solder pins per potential | 1 |

## Material data

| | |
|---|---|
| Note (material data) | Information on material specifications can be found here |
| Color | orange |
| Material group | I |
| Insulation material (main housing) | Polyamide (PA66) |
| Flammability class per UL94 | V0 |
| Contact material | Copper alloy |
| Contact Plating | Tin |
| Fire load | 0.098 MJ |
| Weight | 5.2 g |

## Environmental requirements

| | |
|---|---|
| Limit temperature range | -60 … +100 °C |
| Processing temperature | -35 … +60 °C |

### Environmental Testing

| | |
|---|---|
| Test specification: Railway applications – Rolling stock – Electronic equipment | DIN EN 50155 (VDE 0115-200):2022-06 |
| Test procedure: Railway applications – Rolling stock equipment – Vibration and shock tests | DIN EN 61373 (VDE 0115-0106):2011-04 |
| Spectrum/Mounting location | Service life test, Category 1, Class A/B |
| Functional test with noise-like oscillations | Test passed according to Section 8 of the standard |
| Frequency | $f_1$ = 5 Hz to $f_2$ = 150 Hz |
| Acceleration | 0.101g (highest test level used for all axes) |
| Test duration per axis | 10 min. |
| Test directions | X, Y and Z axes |
| Monitoring of contact faults and interruptions | Passed |
| Voltage drop measurement before and after each axis | Passed |
| Simulated service life test through increased levels of noise-like oscillations | Test passed according to Section 9 of the standard |
| Frequency | $f_1$ = 5 Hz to $f_2$ = 150 Hz |
| Acceleration | 0.572g (highest test level used for all axes) |
| Test duration per axis | 5 h |
| Test directions | X, Y and Z axes |
| Extended testing: Monitoring of contact faults and interruptions | Passed |
| Extended testing: Voltage drop measurement before and after each axis | Passed |
| Shock test | Test passed according to Section 10 of the standard |
| Shock pulse form | Half sine |


Continued on next page

## Environmental Testing

| | |
|---|---|
| Acceleration | 5g (highest test level used for all axes) |
| Shock duration | 30 ms |
| Number of shocks (per axis) | 3 pos. und 3 neg. |
| Test directions | X, Y and Z axes |
| Extended testing: Monitoring of contact faults and interruptions | Passed |
| Extended testing: Voltage drop measurement before and after each axis | Passed |
| Vibration and shock stress for rolling stock equipment | Passed |

## Commercial data

| | |
|---|---|
| Product Group | 3 (Multi Conn. System) |
| PU (SPU) | 50 pcs |
| Packaging type | Box |
| Country of origin | DE |
| GTIN | 4044918626057 |
| Customs tariff number | 85366990990 |

## Product Classification

| | |
|---|---|
| UNSPSC | 39121409 |
| eCl@ss 10.0 | 27-44-04-02 |
| eCl@ss 9.0 | 27-44-04-02 |
| ETIM 9.0 | EC002637 |
| ETIM 10.0 | EC002637 |
| ECCN | NO US CLASSIFICATION |

## Environmental Product Compliance

| | |
|---|---|
| RoHS Compliance Status | Compliant,No Exemption |

## Approvals / Certificates

### General approvals

| Approval | Standard | Certificate Name |
|---|---|---|
| UL<br>Underwriters Laboratories Inc. | UL 1977 | E45171 |
| UR<br>Underwriters Laboratories Inc. | UL 1059 | E45172 |

### Declarations of conformity and manufacturer's declarations

| Approval | Standard | Certificate Name |
|---|---|---|
| Railway<br>WAGO GmbH & Co. KG | - | Railway Ready |


Continued on next page

## Approvals for marine applications

| Approval | Standard | Certificate Name |
|---|---|---|
| ABS<br>American Bureau of Shipping | - | 24-0095975-PDA |
| BV<br>Bureau Veritas S.A. | IEC 60998 | 11915/E0 BV |
| DNV<br>DNV GL SE | - | TAE000016Z |

## Downloads

### Environmental Product Compliance

**Compliance Search**

Environmental Product Compliance
232-764/039-000

### Documentation

**Additional Information**

| | | |
|---|---|---|
| Technical Section | 03.04.2019 | pdf<br>2027.26 KB |

### CAD/CAE-Data

**CAE data**

EPLAN Data Portal
232-764/039-000

**PCB Design**

Symbol and Footprint via SamacSys
232-764/039-000

Symbol and Footprint via Ultra Librarian
232-764/039-000

## 1 Compatible Products

### 1.1 System counterpart

#### 1.1.1 Male connector/plug



Item No.: 731-634
1-conductor male connector; CAGE CLAMP®; 2.5 mm²; Pin spacing 7.62 mm; 4-pole; orange

## 1.2 Optional Accessories

### 1.2.1 Test and measurement

#### 1.2.1.1 Testing accessories



Item No.: 210-136
Test plug; 2 mm Ø; with 500 mm cable; red



Item No.: 231-662
Test plugs for female connectors; for 7.5 mm and 7.62 mm pin spacing; 2,50 mm²; light gray