Data Sheet | Item Number: 232-838/045-000

THT female header; angled; Pin spacing 7.5 mm; 8-pole; 0.6 x 1.0 mm solder pin; gray

https://www.wago.com/232-838/045-000

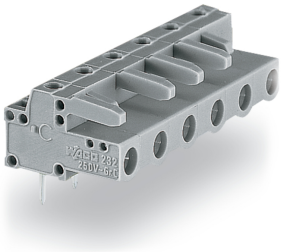

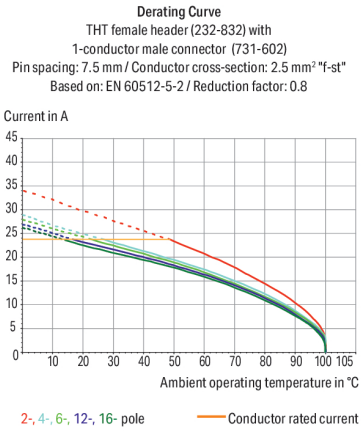

Color: gray

Similar to illustration

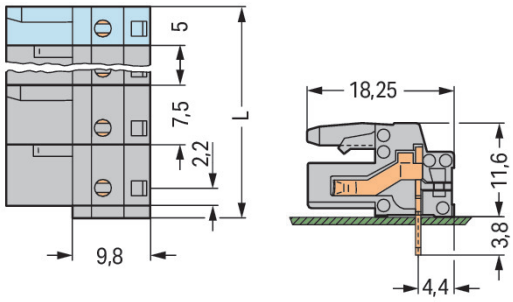

Dimensions in mm
L = (pole no. – 1) x pin spacing + 5 mm + 1.5 mm2- to 3-pole female connectors – one latch only

Female connector, 232 Series, with 7.5 mm pin spacing

Our female connector (item number 232-838/045-000) is designed for seamless electrical installations. Dimensions: (59 x 15.4 x 18.25) mm (width x height x depth).

The contact surface is coated with tin. The pcb connector is designed for THT soldering.

Notes

Safety Information	The *MCS – MULTI CONNECTION SYSTEM* includes connectors without breaking capacity in accordance with DIN EN 61984. When used as intended, these connectors must not be connected/disconnected when live or under load.When used as intended, these connectors must not be connected/disconnected when live or under load. The circuit design should ensure header pins, which can be touched, are not live when unmated.
Variants:	Other pole numbers 3.8 mm pin projection for male headers with straight solder pins Gold-plated or partially gold-plated contact surfaces Other versions (or variants) can be requested from WAGO Sales or configured at https://configurator.wago.com/.

Electrical data

Ratings per	IEC/EN 60664-1		
Overvoltage category	III	III	II
Pollution degree	3	2	2
Nominal voltage	500 V	630 V	1000 V
Rated impulse withstand voltage	6 kV	6 kV	6 kV
Rated current	12 A	12 A	12 A

Approvals per	UL 1059		
Use group	B	C	D
Rated voltage	300 V	-	300 V
Rated current	15 A	-	10 A

Approvals per	CSA		
Use group	B	C	D
Rated voltage	300 V	-	300 V
Rated current	15 A	-	10 A

Connection Data

Clamping units	8
Total number of potentials	8
Number of connection types	1
Number of levels	1

Connection 1

Pole number	8

Physical data

Pin spacing	7.5 mm / 0.295 inches
Width	59 mm / 2.323 inches
Height	15.4 mm / 0.606 inches
Height from the surface	11.6 mm / 0.457 inches
Depth	18.25 mm / 0.719 inches
Solder pin length	3.8 mm
Solder pin dimensions	0.6 x 1 mm
Drilled hole diameter	$1.3^{(+0.1)}$ mm

Mechanical data

Variable coding	Yes
Anti-rotation protection	Yes

Continued on next page

Plug-in connection

Contact type (pluggable connector)	Female connector/socket
Connector (connection type)	for PCB
Mismating protection	No
Mating direction to the PCB	0 °

PCB contact

PCB contact	THT
Solder pin arrangement	over the entire female connector (in-line)
Number of solder pins per potential	1

Material data

Note (material data)	Information on material specifications can be found here
Color	gray
Material group	I
Insulation material (main housing)	Polyamide (PA66)
Flammability class per UL94	V0
Contact material	Copper alloy
Contact Plating	Tin
Fire load	0.156 MJ
Weight	8.8 g

Environmental requirements

Limit temperature range	-60 … +100 °C
Processing temperature	-35 … +60 °C

Environmental Testing

Test specification: Railway applications – Rolling stock – Electronic equipment	DIN EN 50155 (VDE 0115-200):2022-06
Test procedure: Railway applications – Rolling stock equipment – Vibration and shock tests	DIN EN 61373 (VDE 0115-0106):2011-04
Spectrum/Mounting location	Service life test, Category 1, Class A/B
Functional test with noise-like oscillations	Test passed according to Section 8 of the standard
Frequency	f_1 = 5 Hz to f_2 = 150 Hz
Acceleration	0.101g (highest test level used for all axes)
Test duration per axis	10 min.
Test directions	X, Y and Z axes
Monitoring of contact faults and interruptions	Passed
Voltage drop measurement before and after each axis	Passed
Simulated service life test through increased levels of noise-like oscillations	Test passed according to Section 9 of the standard
Frequency	f_1 = 5 Hz to f_2 = 150 Hz
Acceleration	0.572g (highest test level used for all axes)
Test duration per axis	5 h
Test directions	X, Y and Z axes
Extended testing: Monitoring of contact faults and interruptions	Passed
Extended testing: Voltage drop measurement before and after each axis	Passed
Shock test	Test passed according to Section 10 of the standard
Shock pulse form	Half sine
Acceleration	5g (highest test level used for all axes)

Continued on next page

Environmental Testing

Shock duration	30 ms
Number of shocks (per axis)	3 pos. und 3 neg.
Test directions	X, Y and Z axes
Extended testing: Monitoring of contact faults and interruptions	Passed
Extended testing: Voltage drop measurement before and after each axis	Passed
Vibration and shock stress for rolling stock equipment	Passed

Commercial data

Product Group	3 (Multi Conn. System)
PU (SPU)	25 pcs
Packaging type	Box
Country of origin	DE
GTIN	4044918580137
Customs tariff number	85366990990

Product Classification

UNSPSC	39121409
eCl@ss 10.0	27-44-04-02
eCl@ss 9.0	27-44-04-02
ETIM 9.0	EC002637
ETIM 10.0	EC002637
ECCN	NO US CLASSIFICATION

Environmental Product Compliance

RoHS Compliance Status	Compliant,No Exemption

Approvals / Certificates

General approvals

Approval	Standard	Certificate Name
UR Underwriters Laboratories Inc.	UL 1059	E45172
UR Underwriters Laboratories Inc.	UL 1977	E 45171

Declarations of conformity and manufacturer's declarations

Approval	Standard	Certificate Name
Railway WAGO GmbH & Co. KG	-	Railway Ready

Continued on next page

Downloads

Environmental Product Compliance

Compliance Search

Environmental Product Compliance 232-838/045-000

Documentation

Additional Information

Technical Section	03.04.2019	pdf 2027.26 KB

CAD/CAE-Data

PCB Design

Symbol and Footprint via SamacSys 232-838/045-000

Symbol and Footprint via Ultra Librarian 232-838/045-000

1 Compatible Products

1.1 System counterpart

1.1.1 Male connector/plug



Item No.: 731-608
1-conductor male connector; CAGE CLAMP®; 2.5 mm²; Pin spacing 7.5 mm; 8-pole; 2,50 mm²; gray

1.2 Optional Accessories

1.2.1 Test and measurement

1.2.1.1 Testing accessories



Item No.: 210-136
Test plug; 2 mm Ø; with 500 mm cable; red



Item No.: 231-662
Test plugs for female connectors; for 7.5 mm and 7.62 mm pin spacing; 2,50 mm²; light gray