Data Sheet | Item Number: 233-203

PCB terminal block; push-button; 0.5 mm²; Pin spacing 2.5 mm; 3-pole; CAGE CLAMP®; gray

https://www.wago.com/233-203

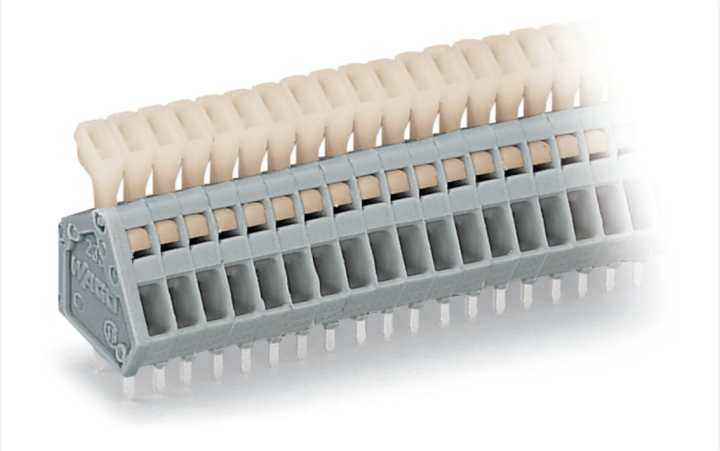

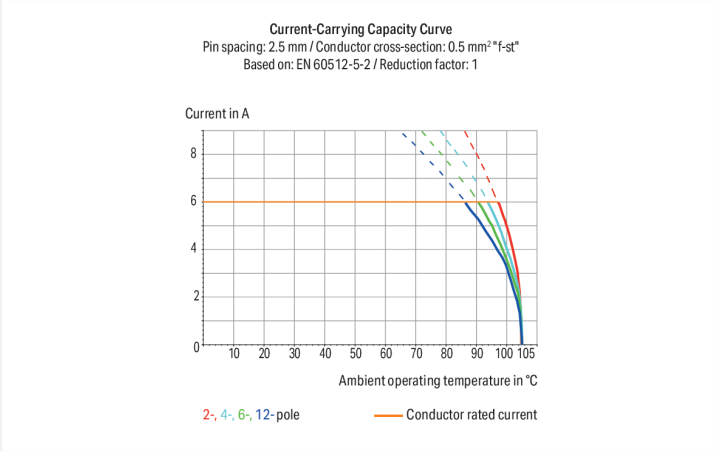

Color: gray

Similar to illustration

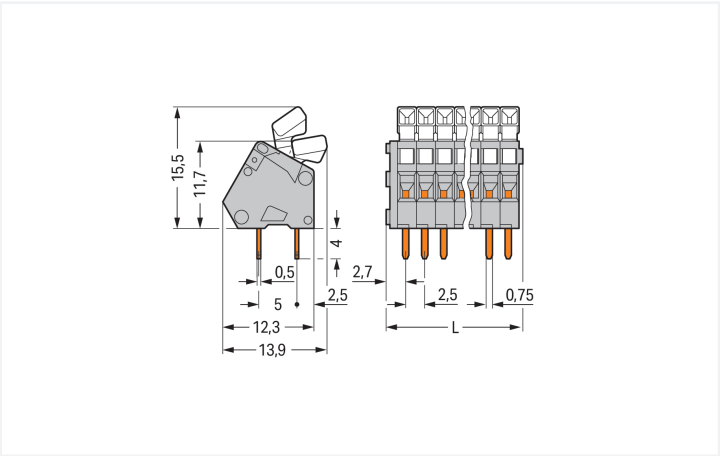

Dimensions in mm
L = (pole no. x pin spacing) + 2.3 mm

PCB terminal block, 233 Series, 30 °conductor entry to board

This PCB terminal block (item number 233-203) is designed to connect conductors quickly and easily. It is ideal for custom installations with different mounting types. Conductors should only be connected to this PCB terminal block if their strip length is between 5 and 6 mm . Featuring one conductor terminal along with CAGE CLAMP®, this connector outperforms the competition. Our CAGE CLAMP® connection provides a secure and maintenance-free way to connect all types of conductors. You do not need to prepare the conductor in any way, such as crimping ferrules. The item's dimensions are (9.8 x 19.5 x 13.9) mm (width x height x depth). Depending on the conductor type, this PCB terminal block is ideal for conductor cross sections ranging from 0.08 mm² to 0.5 mm².

Tin is used for coating the contact surfaces. A push-button is used to operate this PCB terminal block. THT is used to assemble the PCB terminal block. The conductor is designed to be inserted into the board at an angle of 30°..

Continued on next page

Notes

Variants:	Other pole numbers Other colors Mixed-color PCB connector strips Direct marking Other versions (or variants) can be requested from WAGO Sales or configured at https://configurator.wago.com/.

Electrical data

Ratings per	IEC/EN 60664-1		
Overvoltage category	III	III	II
Pollution degree	3	2	2
Nominal voltage	63 V	160 V	320 V
Rated impulse withstand voltage	2.5 kV	2.5 kV	2.5 kV
Rated current	6 A	6 A	6 A

Approvals per	UL 1059		
Use group	B	C	D
Rated voltage	150 V	-	-
Rated current	4 A	-	-

Approvals per	CSA		
Use group	B	C	D
Rated voltage	150 V	-	-
Rated current	4 A	-	-

Connection Data

Clamping units	3
Total number of potentials	3
Number of connection types	1
Number of levels	1

Connection 1

Connection technology	CAGE CLAMP®
Actuation type	Push-button
Solid conductor	0.08 … 0.5 mm² / 28 … 20 AWG
Fine-stranded conductor	0.08 … 0.5 mm² / 28 … 20 AWG
Fine-stranded conductor; with insulated ferrule	0.25 mm²
Fine-stranded conductor; with uninsulated ferrule	0.25 mm²
Note (conductor cross-section)	Terminating 0.75 mm²/18 AWG conductors is possible; however insulation diameter allows only every other clamping unit to be terminated with this conductor size.
Strip length	5 … 6 mm / 0.2 … 0.24 inches
Conductor connection direction to PCB	30 °
Pole number	3

Physical data

Pin spacing	2.5 mm / 0.098 inches
Width	9.8 mm / 0.386 inches
Height	19.5 mm / 0.768 inches
Height from the surface	15.5 mm / 0.61 inches
Depth	13.9 mm / 0.547 inches
Solder pin length	4 mm
Solder pin dimensions	0.5 x 0.75 mm
Drilled hole diameter	1.1 $^{(+0.1)}$ mm

Continued on next page

PCB contact

PCB contact	THT
Solder pin arrangement	over the entire terminal strip (in-line)
Number of solder pins per potential	2

Material data

Note (material data)	Information on material specifications can be found here
Color	gray
Material group	I
Insulation material (main housing)	Polyamide (PA66)
Flammability class per UL94	V0
Clamping spring material	Chrome-nickel spring steel (CrNi)
Contact material	Electrolytic copper (E_{Cu})
Contact Plating	Tin
Fire load	0.018 MJ
Weight	1.3 g

Environmental requirements

Limit temperature range	-60 … +105 °C

Commercial data

Product Group	4 (Printed Circuit Connectors)
PU (SPU)	500 (125) pcs
Packaging type	Box
Country of origin	CH
GTIN	4045454049430
Customs tariff number	85369010000

Product Classification

UNSPSC	39121409
eCl@ss 10.0	27-44-04-01
eCl@ss 9.0	27-44-04-01
ETIM 9.0	EC002643
ETIM 10.0	EC002643
ECCN	NO US CLASSIFICATION

Environmental Product Compliance

RoHS Compliance Status	Compliant,No Exemption

Approvals / Certificates

General approvals

Approval	Standard	Certificate Name
CCA DEKRA Certification B.V.	EN 60998	NTR NL 6946
CCA DEKRA Certification B.V.	EN 60998	2153951.01
CCA DEKRA Certification B.V.	EN 60947-7-4	NTR NL 7786

General approvals

CSA DEKRA Certification B.V.	C22.2	1465035
KEMA/KEUR DEKRA Certification B.V.	EN 60947-7-4	71-111040
UL UL International Germany GmbH	UL 1059	E45172

Continued on next page

Declarations of conformity and manufacturer's declarations

Approval	Standard	Certificate Name
EU-Declaration of Conformity WAGO GmbH & Co. KG	-	-
UK-Declaration of Conformity WAGO GmbH & Co. KG	-	-

Approvals for marine applications

Approval	Standard	Certificate Name
ABS American Bureau of Shipping	-	24-0095975-PDA
BV Bureau Veritas S.A.	IEC 60998	11915/E0 BV
DNV DNV GL SE	-	TAE000016Z
PRS Polski Rejestr Statków	-	TE/1095/880590/23

Downloads

Environmental Product Compliance

Compliance Search

Environmental Product Compliance 233-203

Documentation

Additional Information

Technical Section	03.04.2019	pdf 2027.26 KB

CAD/CAE-Data

CAD data

2D/3D Models 233-203

CAE data

EPLAN Data Portal 233-203

ZUKEN Portal 233-203

PCB Design

Symbol and Footprint via SamacSys 233-203

Symbol and Footprint via Ultra Librarian 233-203

Continued on next page

1 Compatible Products

1.1 Optional Accessories

1.1.1 Ferrule

1.1.1.1 Ferrule



Item No.: 216-321
Ferrule; Sleeve for 0.25 mm² / AWG 24; insulated; electro-tin plated; yellow



Item No.: 216-151
Ferrule; Sleeve for 0.25 mm² / AWG 24; uninsulated; electro-tin plated; silver-colored

1.1.2 Marking

1.1.2.1 Marking strip

Item No.: 210-331/250-202
Marking strips; as a DIN A4 sheet; MARKED; 1-16 (400x); Height of marker strip: 2.3 mm/0.091 in; Strip length 182 mm; Horizontal marking; Self-adhesive; white



Item No.: 210-331/254-202
Marking strips; as a DIN A4 sheet; MARKED; 1-16 (400x); Height of marker strip: 2.3 mm/0.091 in; Strip length 182 mm; Horizontal marking; Self-adhesive; white

Item No.: 210-331/250-207
Marking strips; as a DIN A4 sheet; MARKED; 1-48 (100x); Height of marker strip: 2.3 mm/0.091 in; Strip length 182 mm; Horizontal marking; Self-adhesive; white



Item No.: 210-331/254-207
Marking strips; as a DIN A4 sheet; MARKED; 1-48 (100x); Height of marker strip: 2.3 mm/0.091 in; Strip length 182 mm; Horizontal marking; Self-adhesive; white

Item No.: 210-331/250-204
Marking strips; as a DIN A4 sheet; MARKED; 17-32 (400x); Height of marker strip: 2.3 mm/0.091 in; Strip length 182 mm; Horizontal marking; Self-adhesive; white



Item No.: 210-331/254-204
Marking strips; as a DIN A4 sheet; MARKED; 17-32 (400x); Height of marker strip: 2.3 mm/0.091 in; Strip length 182 mm; Horizontal marking; Self-adhesive; white

Item No.: 210-331/250-206
Marking strips; as a DIN A4 sheet; MARKED; 33-48 (400x); Height of marker strip: 2.3 mm/0.091 in; Strip length 182 mm; Horizontal marking; Self-adhesive; white



Item No.: 210-331/254-206
Marking strips; as a DIN A4 sheet; MARKED; 33-48 (400x); Height of marker strip: 2.3 mm/0.091 in; Strip length 182 mm; Horizontal marking; Self-adhesive; white

1.1.3 Tool

1.1.3.1 Operating tool



Item No.: 210-719
Operating tool; Blade: 2.5 x 0.4 mm; with a partially insulated shaft



Item No.: 210-648
Operating tool; Blade: 2.5 x 0.4 mm; with a partially insulated shaft; angled; short

Installation Notes

Conductor termination

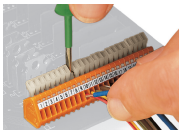

Inserting/removing a conductor.



Nominal cross-section: 0.5 mm² (20 AWG), 0.75 mm² (18 AWG) only in every other position

Continued on next page

Marking



Labeling via self-adhesive marking strips or factory direct marking.