Data Sheet | Item Number: 233-210

PCB terminal block; push-button; 0.5 mm²; Pin spacing 2.5 mm; 10-pole; CAGE CLAMP®; gray

https://www.wago.com/233-210

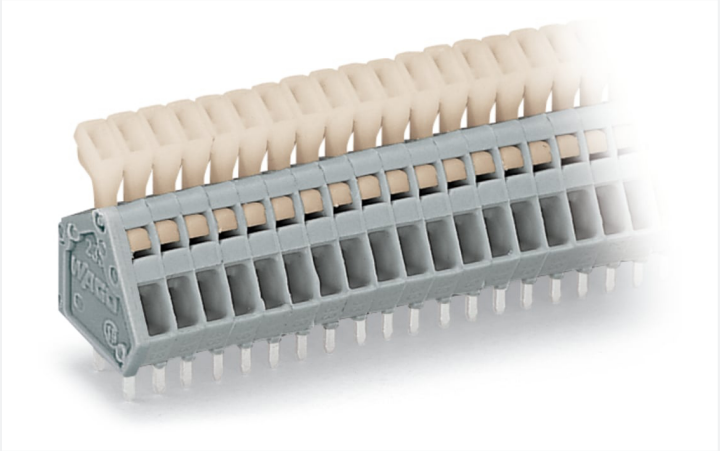

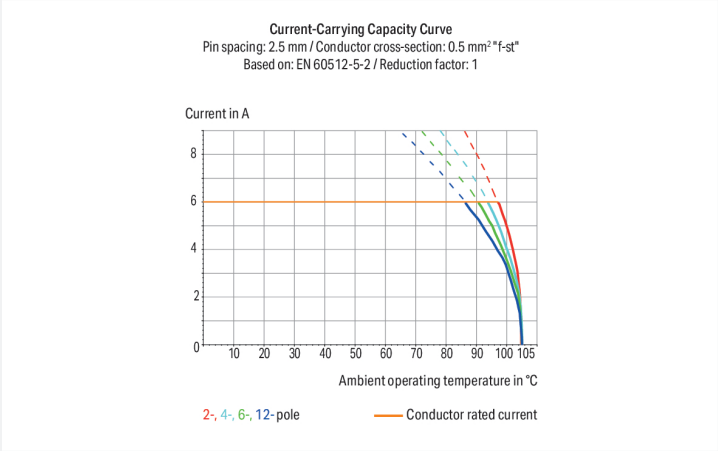

Color: gray

Similar to illustration

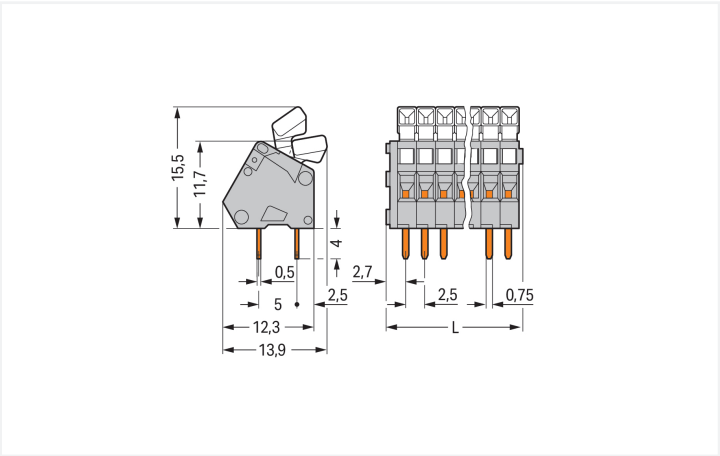

Dimensions in mm
L = (pole no. x pin spacing) + 2.3 mm

PCB terminal block, 233 Series, push-button

This PCB terminal block (item number 233-210) is designed to connect conductors quickly and easily. It is a universal connector that can be used practically anywhere, e.g., as a pluggable PCB connector, panel feedthrough header, connector for rail-mount terminal blocks, or a floating connector for different mounting methods. Conductors should only be connected to this PCB terminal block if their strip length is between 5 and 6 mm . This product features one conductor terminal and utilizes CAGE CLAMP®. Our reliable and maintenance-free CAGE CLAMP® connection makes it easy to connect all types of conductors without having to prepare the conductor. For example, you don't need to crimp ferrules. Dimensions: (27.3 x 19.5 x 13.9) mm (width x height x depth). Depending on the type of conductor, this PCB terminal block is ideal for conductor cross sections ranging from 0.08 mm² to 0.5 mm². The contact surface is coated with tin. A push-button is used to operate this PCB terminal block. The PCB terminal block is designed for THT soldering. Insert the conductor at a 30° angle..

Notes

Variants:	Other pole numbers Other colors Mixed-color PCB connector strips Direct marking Other versions (or variants) can be requested from WAGO Sales or configured at https://configurator.wago.com/.

Electrical data

Ratings per	IEC/EN 60664-1		
Overvoltage category	III	III	II
Pollution degree	3	2	2
Nominal voltage	63 V	160 V	320 V
Rated impulse withstand voltage	2.5 kV	2.5 kV	2.5 kV
Rated current	6 A	6 A	6 A

Approvals per	UL 1059		
Use group	B	C	D
Rated voltage	150 V	-	-
Rated current	4 A	-	-

Approvals per	CSA		
Use group	B	C	D
Rated voltage	150 V	-	-
Rated current	4 A	-	-

Connection Data

Clamping units	10
Total number of potentials	10
Number of connection types	1
Number of levels	1

Connection 1

Connection technology	CAGE CLAMP®
Actuation type	Push-button
Solid conductor	0.08 … 0.5 mm² / 28 … 20 AWG
Fine-stranded conductor	0.08 … 0.5 mm² / 28 … 20 AWG
Fine-stranded conductor; with insulated ferrule	0.25 mm²
Fine-stranded conductor; with uninsulated ferrule	0.25 mm²
Note (conductor cross-section)	Terminating 0.75 mm²/18 AWG conductors is possible; however insulation diameter allows only every other clamping unit to be terminated with this conductor size.
Strip length	5 … 6 mm / 0.2 … 0.24 inches
Conductor connection direction to PCB	30 °
Pole number	10

Physical data

Pin spacing	2.5 mm / 0.098 inches
Width	27.3 mm / 1.075 inches
Height	19.5 mm / 0.768 inches
Height from the surface	15.5 mm / 0.61 inches
Depth	13.9 mm / 0.547 inches
Solder pin length	4 mm
Solder pin dimensions	0.5 x 0.75 mm
Drilled hole diameter	1.1 $^{(+0.1)}$ mm

Continued on next page

PCB contact

PCB contact	THT
Solder pin arrangement	over the entire terminal strip (in-line)
Number of solder pins per potential	2

Material data

Note (material data)	Information on material specifications can be found here
Color	gray
Material group	I
Insulation material (main housing)	Polyamide (PA66)
Flammability class per UL94	V0
Clamping spring material	Chrome-nickel spring steel (CrNi)
Contact material	Electrolytic copper (E_{Cu})
Contact Plating	Tin
Fire load	0.053 MJ
Weight	4 g

Environmental requirements

Limit temperature range	-60 … +105 °C

Commercial data

Product Group	4 (Printed Circuit Connectors)
PU (SPU)	180 (45) pcs
Packaging type	Box
Country of origin	CH
GTIN	4045454049522
Customs tariff number	85369010000

Product Classification

UNSPSC	39121409
eCl@ss 10.0	27-44-04-01
eCl@ss 9.0	27-44-04-01
ETIM 9.0	EC002643
ETIM 10.0	EC002643
ECCN	NO US CLASSIFICATION

Environmental Product Compliance

RoHS Compliance Status	Compliant,No Exemption

Approvals / Certificates

General approvals

Approval	Standard	Certificate Name
CCA DEKRA Certification B.V.	EN 60998	NTR NL 6946
CCA DEKRA Certification B.V.	EN 60998	2153951.01
CCA DEKRA Certification B.V.	EN 60947-7-4	NTR NL 7786

General approvals

CSA DEKRA Certification B.V.	C22.2	1465035
KEMA/KEUR DEKRA Certification B.V.	EN 60947-7-4	71-111040
UL UL International Germany GmbH	UL 1059	E45172

Continued on next page

Declarations of conformity and manufacturer's declarations

Approval	Standard	Certificate Name
EU-Declaration of Conformity WAGO GmbH & Co. KG	-	-
UK-Declaration of Conformity WAGO GmbH & Co. KG	-	-

Approvals for marine applications

Approval	Standard	Certificate Name
ABS American Bureau of Shipping	-	24-0095975-PDA
BV Bureau Veritas S.A.	IEC 60998	11915/E0 BV
DNV DNV GL SE	-	TAE000016Z
PRS Polski Rejestr Statków	-	TE/1095/880590/23

Downloads

Environmental Product Compliance

Compliance Search

Environmental Product Compliance 233-210

Documentation

Additional Information

Technical Section	03.04.2019	pdf 2027.26 KB

CAD/CAE-Data

CAD data

2D/3D Models 233-210

CAE data

EPLAN Data Portal 233-210

ZUKEN Portal 233-210

PCB Design

Symbol and Footprint via SamacSys 233-210

Symbol and Footprint via Ultra Librarian 233-210

Continued on next page

1 Compatible Products

1.1 Optional Accessories

1.1.1 Ferrule

1.1.1.1 Ferrule



Item No.: 216-321
Ferrule; Sleeve for 0.25 mm² / AWG 24; insulated; electro-tin plated; yellow



Item No.: 216-151
Ferrule; Sleeve for 0.25 mm² / AWG 24; uninsulated; electro-tin plated; silver-colored

1.1.2 Marking

1.1.2.1 Marking strip

Item No.: 210-331/250-202
Marking strips; as a DIN A4 sheet; MARKED; 1-16 (400x); Height of marker strip: 2.3 mm/0.091 in; Strip length 182 mm; Horizontal marking; Self-adhesive; white



Item No.: 210-331/254-202
Marking strips; as a DIN A4 sheet; MARKED; 1-16 (400x); Height of marker strip: 2.3 mm/0.091 in; Strip length 182 mm; Horizontal marking; Self-adhesive; white

Item No.: 210-331/250-207
Marking strips; as a DIN A4 sheet; MARKED; 1-48 (100x); Height of marker strip: 2.3 mm/0.091 in; Strip length 182 mm; Horizontal marking; Self-adhesive; white



Item No.: 210-331/254-207
Marking strips; as a DIN A4 sheet; MARKED; 1-48 (100x); Height of marker strip: 2.3 mm/0.091 in; Strip length 182 mm; Horizontal marking; Self-adhesive; white

Item No.: 210-331/250-204
Marking strips; as a DIN A4 sheet; MARKED; 17-32 (400x); Height of marker strip: 2.3 mm/0.091 in; Strip length 182 mm; Horizontal marking; Self-adhesive; white



Item No.: 210-331/254-204
Marking strips; as a DIN A4 sheet; MARKED; 17-32 (400x); Height of marker strip: 2.3 mm/0.091 in; Strip length 182 mm; Horizontal marking; Self-adhesive; white

Item No.: 210-331/250-206
Marking strips; as a DIN A4 sheet; MARKED; 33-48 (400x); Height of marker strip: 2.3 mm/0.091 in; Strip length 182 mm; Horizontal marking; Self-adhesive; white



Item No.: 210-331/254-206
Marking strips; as a DIN A4 sheet; MARKED; 33-48 (400x); Height of marker strip: 2.3 mm/0.091 in; Strip length 182 mm; Horizontal marking; Self-adhesive; white

1.1.3 Tool

1.1.3.1 Operating tool



Item No.: 210-719
Operating tool; Blade: 2.5 x 0.4 mm; with a partially insulated shaft



Item No.: 210-648
Operating tool; Blade: 2.5 x 0.4 mm; with a partially insulated shaft; angled; short

Installation Notes

Conductor termination

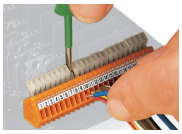

Inserting/removing a conductor.



Nominal cross-section: 0.5 mm² (20 AWG), 0.75 mm² (18 AWG) only in every other position

Continued on next page

Marking



Labeling via self-adhesive marking strips or factory direct marking.