Data Sheet | Item Number: 234-507

PCB terminal block; push-button; 0.5 mm²; Pin spacing 2.54 mm; 7-pole; CAGE CLAMP®; orange

https://www.wago.com/234-507

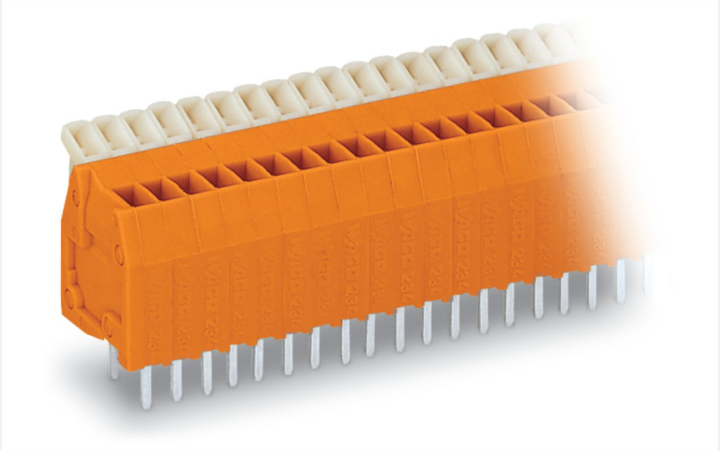

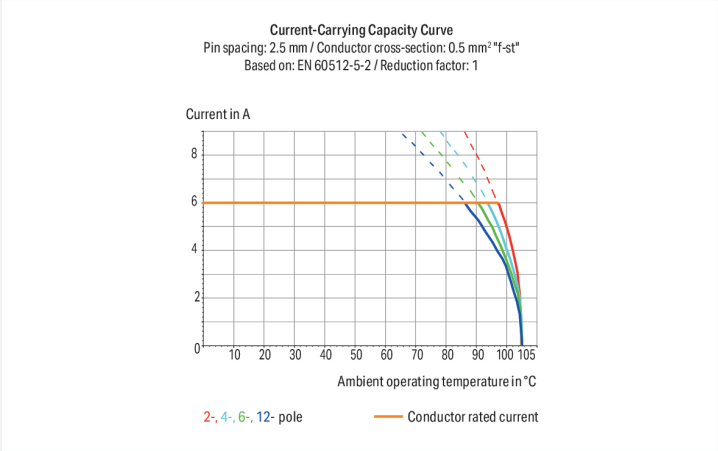

Color: orange

Similar to illustration

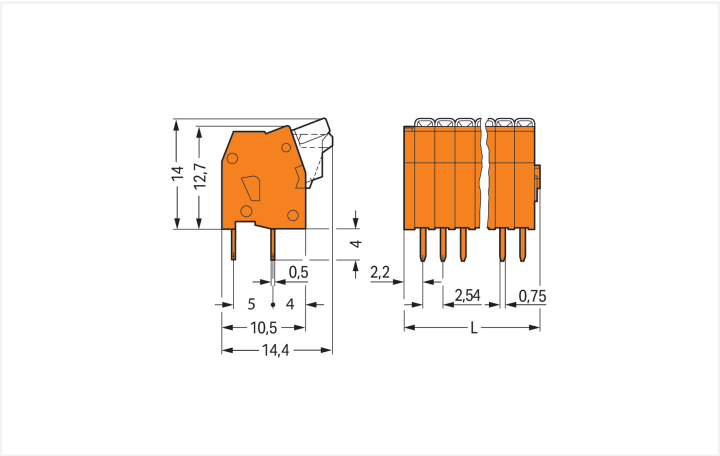

Dimensions in mm
L = (pole no. x pin spacing) + 2.2 mm

PCB terminal block, 234 Series, CAGE CLAMP®

This PCB terminal block (item number 234-507) is designed for simple and secure connections. It is a universal connector that can be used practically anywhere, for example, as a pluggable PCB connector, panel feedthrough header, connector for rail-mount terminal blocks, or a floating connector for different mounting methods. Strip lengths must be between 5 and 6 mm when connecting conductors to this PCB terminal block. This product features one conductor terminal and utilizes CAGE CLAMP®. Our celebrated universal connection known as CAGE CLAMP® is industry-leading when it comes to connection technology and electrical interconnections. The item's dimensions are (19.98 x 18 x 14.4) mm (width x height x depth). This PCB terminal block is suitable for conductor cross sections ranging from 0.08 mm² to 0.5 mm². Tin is used for coating the contact surfaces. This PCB terminal block is operated with a push-button. THT is used to solder the PCB terminal block. Insert the conductor into the board at a 90° angle..

Notes

Variants:	Other pole numbers Other colors Mixed-color PCB connector strips Direct marking Other versions (or variants) can be requested from WAGO Sales or configured at https://configurator.wago.com/.

Electrical data

Ratings per	IEC/EN 60664-1		
Overvoltage category	III	III	II
Pollution degree	3	2	2
Nominal voltage	63 V	160 V	320 V
Rated impulse withstand voltage	2.5 kV	2.5 kV	2.5 kV
Rated current	6 A	6 A	6 A

Approvals per	UL 1059		
Use group	B	C	D
Rated voltage	150 V	-	-
Rated current	4 A	-	-

Approvals per	CSA		
Use group	B	C	D
Rated voltage	150 V	-	-
Rated current	4 A	-	-

Connection Data

Clamping units	7
Total number of potentials	7
Number of connection types	1
Number of levels	1

Connection 1

Connection technology	CAGE CLAMP®
Actuation type	Push-button
Solid conductor	0.08 … 0.5 mm² / 28 … 20 AWG
Fine-stranded conductor	0.08 … 0.5 mm² / 28 … 20 AWG
Fine-stranded conductor; with insulated ferrule	0.25 mm²
Fine-stranded conductor; with uninsulated ferrule	0.25 mm²
Strip length	5 … 6 mm / 0.2 … 0.24 inches
Conductor connection direction to PCB	90 °
Pole number	7

Physical data

Pin spacing	2.54 mm / 0.1 inches
Width	19.98 mm / 0.787 inches
Height	18 mm / 0.709 inches
Height from the surface	14 mm / 0.551 inches
Depth	14.4 mm / 0.567 inches
Solder pin length	4 mm
Solder pin dimensions	0.5 x 0.75 mm
Drilled hole diameter	1.1 $^{(+0.1)}$ mm

Continued on next page

PCB contact

PCB contact	THT
Solder pin arrangement	over the entire terminal strip (in-line)
Number of solder pins per potential	2

Material data

Note (material data)	Information on material specifications can be found here
Color	orange
Material group	I
Insulation material (main housing)	Polyamide (PA66)
Flammability class per UL94	V0
Clamping spring material	Chrome-nickel spring steel (CrNi)
Contact material	Electrolytic copper (E_{Cu})
Contact Plating	Tin
Fire load	0.046 MJ
Weight	3.6 g

Environmental requirements

Limit temperature range	-60 … +105 °C

Commercial data

Product Group	4 (Printed Circuit Connectors)
PU (SPU)	240 (60) pcs
Packaging type	Box
Country of origin	CH
GTIN	4044918652155
Customs tariff number	85369010000

Product Classification

UNSPSC	39121409
eCl@ss 10.0	27-44-04-01
eCl@ss 9.0	27-44-04-01
ETIM 9.0	EC002643
ETIM 10.0	EC002643
ECCN	NO US CLASSIFICATION

Environmental Product Compliance

RoHS Compliance Status	Compliant,No Exemption

Approvals / Certificates

General approvals

Approval	Standard	Certificate Name
CCA DEKRA Certification B.V.	EN 60998	NTR NL 6946
CCA DEKRA Certification B.V.	EN 60998	2153951.01
CCA DEKRA Certification B.V.	EN 60947-7-4	NTR NL 7787

General approvals

CSA DEKRA Certification B.V.	C22.2	1465035
KEMA/KEUR DEKRA Certification B.V.	EN 60947-7-4	71-111042
UL UL International Germany GmbH	UL 1059	E45172

Continued on next page

Declarations of conformity and manufacturer's declarations

Approval	Standard	Certificate Name
EU-Declaration of Conformity WAGO GmbH & Co. KG	-	-
UK-Declaration of Conformity WAGO GmbH & Co. KG	-	-

Approvals for marine applications

Approval	Standard	Certificate Name
ABS American Bureau of Shipping	-	24-0095975-PDA
BV Bureau Veritas S.A.	IEC 60998	11915/E0 BV
DNV DNV GL SE	-	TAE000016Z

Downloads

Environmental Product Compliance

Compliance Search

Environmental Product Compliance 234-507

Documentation

Additional Information

Technical Section	03.04.2019	pdf 2027.26 KB

CAD/CAE-Data

CAD data

2D/3D Models 234-507

CAE data

EPLAN Data Portal 234-507

ZUKEN Portal 234-507

PCB Design

Symbol and Footprint via SamacSys 234-507

Symbol and Footprint via Ultra Librarian 234-507

Continued on next page

1 Compatible Products

1.1 Optional Accessories

1.1.1 Ferrule

1.1.1.1 Ferrule



Item No.: 216-321
Ferrule; Sleeve for 0.25 mm² / AWG 24; insulated; electro-tin plated; yellow



Item No.: 216-151
Ferrule; Sleeve for 0.25 mm² / AWG 24; uninsulated; electro-tin plated; silver-colored

1.1.2 Marking

1.1.2.1 Marking strip

Item No.: 210-331/254-202
Marking strips; as a DIN A4 sheet; MARKED; 1-16 (400x); Height of marker strip: 2.3 mm/0.091 in; Strip length 182 mm; Horizontal marking; Self-adhesive; white



Item No.: 210-331/254-207
Marking strips; as a DIN A4 sheet; MARKED; 1-48 (100x); Height of marker strip: 2.3 mm/0.091 in; Strip length 182 mm; Horizontal marking; Self-adhesive; white

Item No.: 210-331/254-204
Marking strips; as a DIN A4 sheet; MARKED; 17-32 (400x); Height of marker strip: 2.3 mm/0.091 in; Strip length 182 mm; Horizontal marking; Self-adhesive; white



Item No.: 210-331/254-206
Marking strips; as a DIN A4 sheet; MARKED; 33-48 (400x); Height of marker strip: 2.3 mm/0.091 in; Strip length 182 mm; Horizontal marking; Self-adhesive; white

1.1.3 Tool

1.1.3.1 Operating tool



Item No.: 210-719
Operating tool; Blade: 2.5 x 0.4 mm; with a partially insulated shaft



Item No.: 210-648
Operating tool; Blade: 2.5 x 0.4 mm; with a partially insulated shaft; angled; short

Installation Notes

Conductor termination

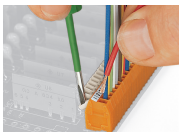

Inserting/removing a conductor.



Nominal cross-section: 0.5 mm² (20 AWG), 0.75 mm² (18 AWG) only in every other position

Marking



Labeling via self-adhesive marking strips or factory direct marking.

Continued on next page