Data Sheet | Item Number: 235-551/333-000

Stackable 2-conductor PCB terminal block; 0.75 mm²; Pin spacing 7.5/7.62 mm; 1-pole; PUSH WIRE®; with test port; gray

https://www.wago.com/235-551/333-000



Color: gray

Similar to illustration

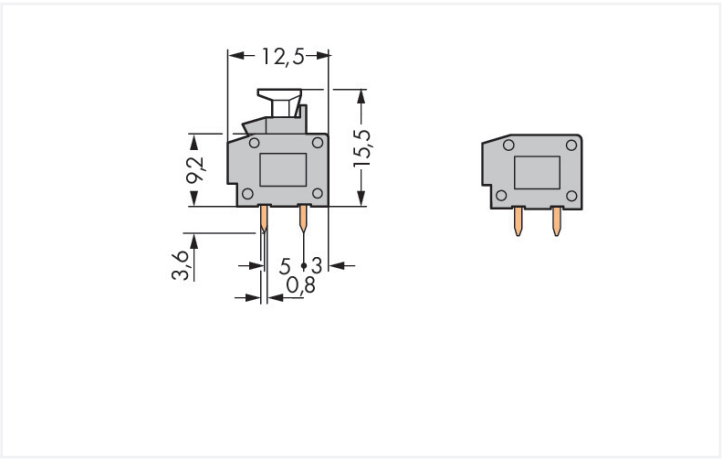

Dimensions in mm

PCB terminal block, 235 Series, solder pin dimensions 0.8 x 0.4 mm

This PCB terminal block (item number 235-551/333-000) is designed for quick and simple connections. You can count on proven safety with these PCB terminal blocks, perfect for a wide range of applications when designing your devices. Strip lengths must be between 9 and 10 mm when connecting conductors to this PCB terminal block. This product features one conductor terminal and utilizes PUSH WIRE®. Our trusted PUSH WIRE® connection offers the fastest method for clamping conductors. It utilizes the conductor's stiffness to overcome the clamping spring's contact force. The dimensions are (7.5 x 19.1 x 12.5) mm (width x height x depth). This PCB terminal block is suitable for conductor cross sections ranging from 0.2 mm² to 0.75 mm².

Tin is used for coating the contact surfaces. A push-button is used to operate this PCB terminal block. The PCB terminal block is designed for THT soldering. Insert the conductor at a 0° angle..

Notes

Variants:	Other colors Other versions (or variants) can be requested from WAGO Sales or configured at https://configurator.wago.com/.

Electrical data

Ratings per	IEC/EN 60664-1		
Overvoltage category	III	III	II
Pollution degree	3	2	2
Nominal voltage	400 V	400 V	800 V
Rated impulse withstand voltage	6 kV	6 kV	6 kV
Rated current	10 A	10 A	10 A

Approvals per	UL 1059		
Use group	B	C	D
Rated voltage	300 V	-	300 V
Rated current	10 A	-	10 A

Approvals per	CSA		
Use group	B	C	D
Rated voltage	300 V	-	-
Rated current	10 A	-	-

Connection Data

Clamping units	2
Total number of potentials	1
Number of connection types	1
Number of levels	1

Connection 1

Connection technology	PUSH WIRE®
Actuation type	Push-button
Solid conductor	0.2 … 0.75 mm² / 24 … 18 AWG
Strip length	9 … 10 mm / 0.35 … 0.39 inches
Conductor connection direction to PCB	0 °
Pole number	1

Physical data

Pin spacing	7.5/7.62 mm / 0.295/0.3 inches
Width	7.5 mm / 0.295 inches
Height	19.1 mm / 0.752 inches
Height from the surface	15.5 mm / 0.61 inches
Depth	12.5 mm / 0.492 inches
Solder pin length	3.6 mm
Solder pin dimensions	0.8 x 0.4 mm
Drilled hole diameter	1 $^{(+0.1)}$ mm

PCB contact

PCB contact	THT
Solder pin arrangement	within the terminal block (in-line)
Number of solder pins per potential	2

Material data

Note (material data)	Information on material specifications can be found here
Color	gray
Material group	I
Insulation material (main housing)	Polyamide (PA66)
Flammability class per UL94	V0
Clamping spring material	Chrome-nickel spring steel (CrNi)
Contact material	Electrolytic copper (E_{Cu})
Contact Plating	Tin
Fire load	0.014 MJ
Weight	0.8 g

Environmental requirements

Limit temperature range	-60 … +105 °C

Commercial data

Product Group	4 (Printed Circuit Connectors)
PU (SPU)	600 (100) pcs
Packaging type	Box
Country of origin	CN
GTIN	4044918831291
Customs tariff number	85369010000

Continued on next page

Product Classification

UNSPSC	39121409
eCl@ss 10.0	27-44-04-01
eCl@ss 9.0	27-44-04-01
ETIM 9.0	EC002643
ETIM 10.0	EC002643
ECCN	NO US CLASSIFICATION

Environmental Product Compliance

RoHS Compliance Status	Compliant,No Exemption

Approvals / Certificates

General approvals

Approval	Standard	Certificate Name
CSA DEKRA Certification B.V.	C22.2	1673956

Downloads

Environmental Product Compliance

Compliance Search

Environmental Product Compliance 235-551/333-000

Documentation

Additional Information

Technical Section	03.04.2019	pdf 2027.26 KB

CAD/CAE-Data

CAE data

EPLAN Data Portal 235-551/333-000

PCB Design

Symbol and Footprint via SamacSys 235-551/333-000

Symbol and Footprint via Ultra Librarian 235-551/333-000

Continued on next page

1 Compatible Products

1.1 Required Accessories

1.1.1 End plate

1.1.1.1 End plate



Item No.: 235-100
End plate; snap-fit type; 1 mm thick; gray

1.2 Optional Accessories

1.2.1 Ferrule

1.2.1.1 Ferrule

Item No.: 216-241
Ferrule; Sleeve for 0.5 mm² / 20 AWG; insulated; electro-tin plated; electrolytic copper; gastight crimped; acc. to DIN 46228, Part 4/09.90; white

Item No.: 216-141
Ferrule; Sleeve for 0.5 mm² / 20 AWG; uninsulated; electro-tin plated; electrolytic copper; gastight crimped; acc. to DIN 46228, Part 1/08.92

Item No.: 216-242
Ferrule; Sleeve for 0.75 mm² / 18 AWG; insulated; electro-tin plated; electrolytic copper; gastight crimped; acc. to DIN 46228, Part 4/09.90; gray

Item No.: 216-142
Ferrule; Sleeve for 0.75 mm² / 18 AWG; uninsulated; electro-tin plated; electrolytic copper; gastight crimped; acc. to DIN 46228, Part 1/08.92

Item No.: 216-243
Ferrule; Sleeve for 1 mm² / AWG 18; insulated; electro-tin plated; electrolytic copper; gastight crimped; acc. to DIN 46228, Part 4/09.90; red

Item No.: 216-143
Ferrule; Sleeve for 1 mm² / AWG 18; uninsulated; electro-tin plated; electrolytic copper; gastight crimped; acc. to DIN 46228, Part 1/08.92



Item No.: 216-244
Ferrule; Sleeve for 1.5 mm² / AWG 16; insulated; electro-tin plated; electrolytic copper; gastight crimped; acc. to DIN 46228, Part 4/09.90; black

Item No.: 216-144
Ferrule; Sleeve for 1.5 mm² / AWG 16; uninsulated; electro-tin plated; electrolytic copper; gastight crimped; acc. to DIN 46228, Part 1/08.92; silver-colored



Item No.: 216-246
Ferrule; Sleeve for 2.5 mm² / AWG 14; insulated; electro-tin plated; electrolytic copper; gastight crimped; acc. to DIN 46228, Part 4/09.90; blue



Item No.: 216-106
Ferrule; Sleeve for 2.5 mm² / AWG 14; uninsulated; electro-tin plated; silver-colored



Item No.: 216-207
Ferrule; Sleeve for 4 mm² / AWG 12; insulated; electro-tin plated; gray



Item No.: 216-107
Ferrule; Sleeve for 4 mm² / AWG 12; uninsulated; electro-tin plated

Installation Notes

Installation

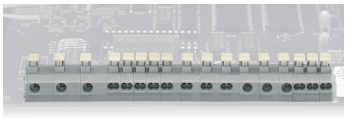

Combining 1- and 2-conductor terminal blocks with different pin spacing.