Data Sheet | Item Number: 235-711

Stackable 2-conductor PCB terminal block; 0.75 mm²; Pin spacing 5/5.08 mm; 1-pole; PUSH WIRE®; gray

https://www.wago.com/235-711

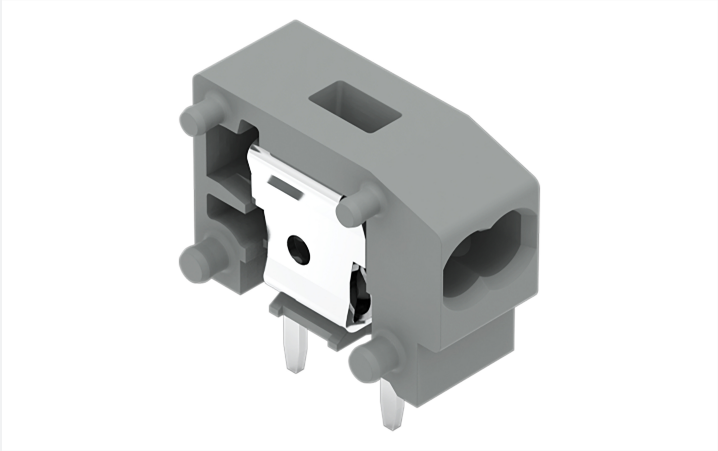

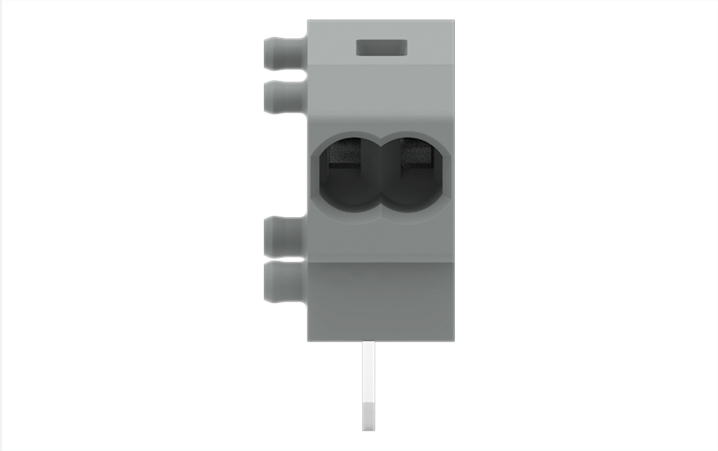

Color: gray

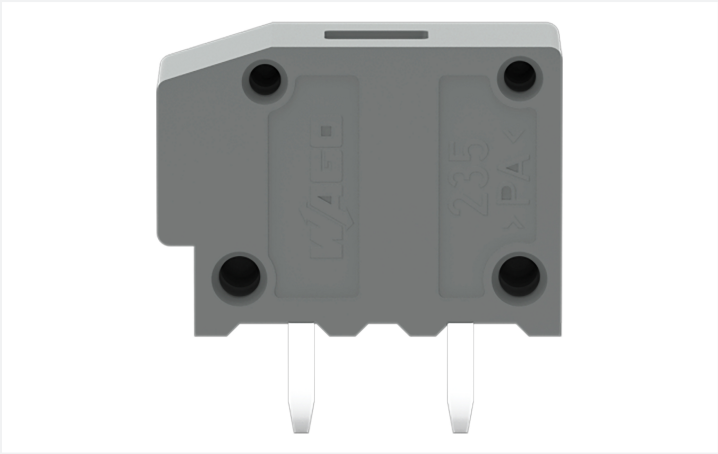

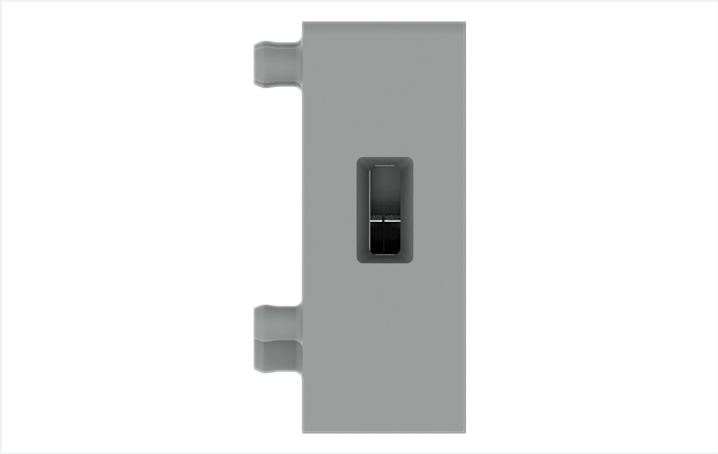

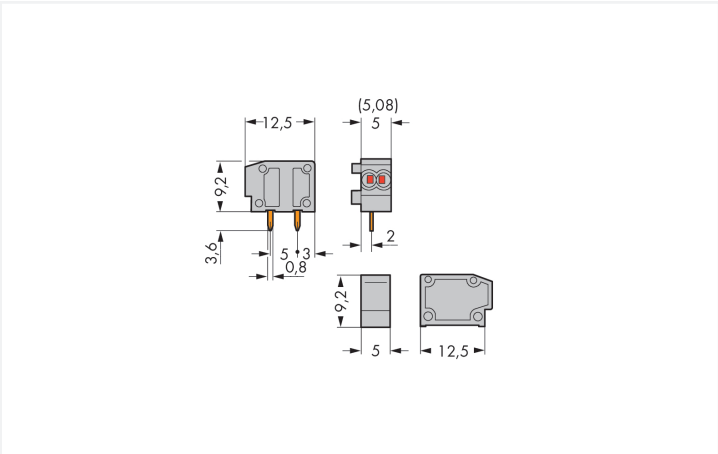

Dimensions in mm

PCB terminal block, 235 Series, solder pin dimensions 0.8 x 0.4 mm

Connect conductors quickly and securely with this PCB terminal block (item number 235-711). You can rely on proven safety with these PCB terminal blocks, perfect for a wide range of applications when designing your devices. Ensure that the strip lengths are between 9 and 10 mm when connecting conductors to this PCB terminal block. This product features one conductor terminal and utilizes PUSH WIRE®. Our PUSH WIRE® connection uses the stiffness of the conductor to

overcome the clamping spring's contact force, allowing faster and easier conductor clamping. The dimensions are (6.5 x 12.8 x 12.5) mm (width x height x depth). This PCB terminal block is suitable for conductor cross sections ranging from 0.25 mm² to 0.75 mm². The contact surface is coated with tin. An operating tool is used to operate this PCB terminal block. THT is used to assemble the PCB terminal block. The conductor is designed to be inserted into the board at a 0° angle..

Notes

Variants:	Other colors Other versions (or variants) can be requested from WAGO Sales or configured at https://configurator.wago.com/.

Electrical data

Ratings per	IEC/EN 60664-1		
Overvoltage category	III	III	II
Pollution degree	3	2	2
Nominal voltage	250 V	320 V	630 V
Rated impulse withstand voltage	4 kV	4 kV	4 kV
Rated current	10 A	10 A	10 A

Approvals per	UL 1059		
Use group	B	C	D
Rated voltage	300 V	-	300 V
Rated current	10 A	-	10 A

Approvals per	CSA		
Use group	B	C	D
Rated voltage	300 V	-	-
Rated current	10 A	-	-

Connection Data

Clamping units	2
Total number of potentials	1
Number of connection types	1
Number of levels	1

Connection 1

Connection technology	PUSH WIRE®
Actuation type	Operating tool
Solid conductor	0.25 … 0.75 mm² / 24 … 18 AWG
Fine-stranded conductor; with uninsulated ferrule	0.25 … 0.34 mm²
Strip length	9 … 10 mm / 0.35 … 0.39 inches
Conductor connection direction to PCB	0 °
Pole number	1

Physical data

Pin spacing	5/5.08 mm / 0.197/0.2 inches
Width	6.5 mm / 0.256 inches
Height	12.8 mm / 0.504 inches
Height from the surface	9.2 mm / 0.362 inches
Depth	12.5 mm / 0.492 inches
Solder pin length	3.6 mm
Solder pin dimensions	0.8 x 0.4 mm
Drilled hole diameter	1 $^{(+0.1)}$ mm

Continued on next page

PCB contact

PCB contact	THT
Solder pin arrangement	within the terminal block (in-line)
Number of solder pins per potential	2

Material data

Note (material data)	Information on material specifications can be found here
Color	gray
Material group	I
Insulation material (main housing)	Polyamide (PA66)
Flammability class per UL94	V0
Clamping spring material	Chrome-nickel spring steel (CrNi)
Contact material	Electrolytic copper (E_{Cu})
Contact Plating	Tin
Fire load	0.011 MJ
Weight	0.7 g

Environmental requirements

Limit temperature range	-60 … +105 °C

Commercial data

Product Group	4 (Printed Circuit Connectors)
PU (SPU)	800 (100) pcs
Packaging type	Box
Country of origin	CH
GTIN	4044918831703
Customs tariff number	85369010000

Product Classification

UNSPSC	39121409
eCl@ss 10.0	27-44-04-01
eCl@ss 9.0	27-44-04-01
ETIM 9.0	EC002643
ETIM 10.0	EC002643
ECCN	NO US CLASSIFICATION

Environmental Product Compliance

RoHS Compliance Status	Compliant,No Exemption

Approvals / Certificates

General approvals

Approval	Standard	Certificate Name
CCA DEKRA Certification B.V.	EN 60947	NTR NL-7144
CCA DEKRA Certification B.V.	EN 60998	NTR NL 6919
CCA DEKRA Certification B.V.	EN 60947-7-4	NTR NL-7774

General approvals

CSA DEKRA Certification B.V.	C22.2	1673956
KEMA/KEUR DEKRA Certification B.V.	EN 60947	2160584.38

Continued on next page

Declarations of conformity and manufacturer's declarations

Approval	Standard	Certificate Name
EU-Declaration of Conformity WAGO GmbH & Co. KG	-	-
UK-Declaration of Conformity WAGO GmbH & Co. KG	-	-

Approvals for marine applications

Approval	Standard	Certificate Name
ABS American Bureau of Shipping	-	24-0095975-PDA
DNV DNV GL SE	-	TAE000016Z

Downloads

Environmental Product Compliance

Compliance Search

Environmental Product Compliance 235-711

Documentation

Additional Information

Technical Section	03.04.2019	pdf 2027.26 KB

CAD/CAE-Data

CAD data

2D/3D Models 235-711

CAE data

EPLAN Data Portal 235-711

ZUKEN Portal 235-711

PCB Design

Symbol and Footprint via SamacSys 235-711

Symbol and Footprint via Ultra Librarian 235-711

Continued on next page

1 Compatible Products

1.1 Required Accessories

1.1.1 End plate

1.1.1.1 End plate



Item No.: 235-100
End plate; snap-fit type; 1 mm thick; gray

1.1.2 Installation

1.1.2.1 Intermediate plate



Item No.: 235-701
Spacer; for doubling the pin spacing; gray

1.2 Optional Accessories

1.2.1 Ferrule

1.2.1.1 Ferrule

Item No.: 216-241
Ferrule; Sleeve for 0.5 mm² / 20 AWG; insulated; electro-tin plated; electrolytic copper; gastight crimped; acc. to DIN 46228, Part 4/09.90; white

Item No.: 216-141
Ferrule; Sleeve for 0.5 mm² / 20 AWG; uninsulated; electro-tin plated; electrolytic copper; gastight crimped; acc. to DIN 46228, Part 1/08.92

Item No.: 216-242
Ferrule; Sleeve for 0.75 mm² / 18 AWG; insulated; electro-tin plated; electrolytic copper; gastight crimped; acc. to DIN 46228, Part 4/09.90; gray

Item No.: 216-142
Ferrule; Sleeve for 0.75 mm² / 18 AWG; uninsulated; electro-tin plated; electrolytic copper; gastight crimped; acc. to DIN 46228, Part 1/08.92

Item No.: 216-243
Ferrule; Sleeve for 1 mm² / AWG 18; insulated; electro-tin plated; electrolytic copper; gastight crimped; acc. to DIN 46228, Part 4/09.90; red

Item No.: 216-143
Ferrule; Sleeve for 1 mm² / AWG 18; uninsulated; electro-tin plated; electrolytic copper; gastight crimped; acc. to DIN 46228, Part 1/08.92



Item No.: 216-244
Ferrule; Sleeve for 1.5 mm² / AWG 16; insulated; electro-tin plated; electrolytic copper; gastight crimped; acc. to DIN 46228, Part 4/09.90; black

Item No.: 216-144
Ferrule; Sleeve for 1.5 mm² / AWG 16; uninsulated; electro-tin plated; electrolytic copper; gastight crimped; acc. to DIN 46228, Part 1/08.92; silver-colored



Item No.: 216-246
Ferrule; Sleeve for 2.5 mm² / AWG 14; insulated; electro-tin plated; electrolytic copper; gastight crimped; acc. to DIN 46228, Part 4/09.90; blue



Item No.: 216-106
Ferrule; Sleeve for 2.5 mm² / AWG 14; uninsulated; electro-tin plated; silver-colored



Item No.: 216-207
Ferrule; Sleeve for 4 mm² / AWG 12; insulated; electro-tin plated; gray



Item No.: 216-107
Ferrule; Sleeve for 4 mm² / AWG 12; uninsulated; electro-tin plated

Installation Notes

Conductor termination

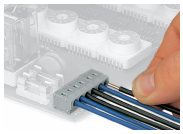

Inserting a solid conductor via push-in termination.

Continued on next page

Conductor removal

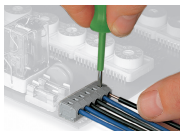

Removing a conductor via screwdriver (2.5 mm blade width).