Data Sheet | Item Number: 235-742

Stackable PCB terminal block; 2.5 mm²; Pin spacing 5/5.08 mm; 1-pole; PUSH WIRE®; dark gray

https://www.wago.com/235-742

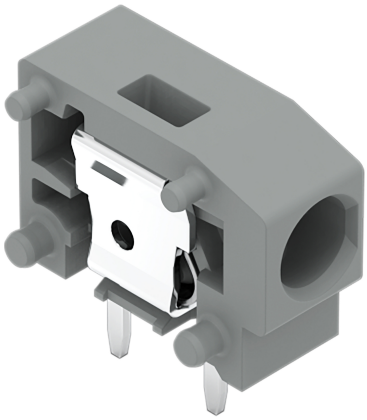

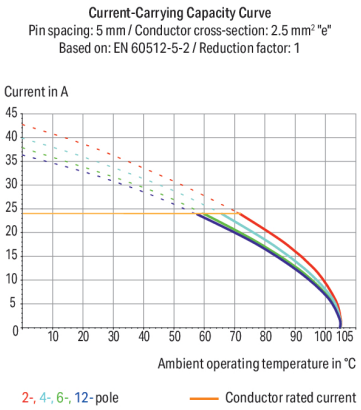

Color: ■ dark gray

Similar to illustration

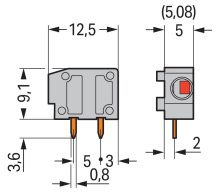

Dimensions in mm

PCB terminal block, 235 Series, solder pin dimensions 0.8 x 0.4 mm

This PCB terminal block (item number 235-742) is designed to connect conductors quickly and easily. It is a universal connector that can be used almost anywhere, for example, as a pluggable PCB connector, panel feedthrough header, connector for rail-mount terminal blocks, or a floating connector for different mounting methods. Strip lengths must be between 9 and 10 mm when connecting conductors to this PCB terminal block. This product features one conductor terminal and utilizes PUSH WIRE®. Our reliable PUSH WIRE® connection offers the fastest method for clamping conductors. It utilizes the conductor's stiffness to overcome the clamping spring's contact force. The item's dimensions are (6.5 x 12.8 x 12.5) mm (width x height x depth). This PCB terminal block is suitable for conductor cross sections ranging from 0.5 mm² to 2.5 mm². Tin is used for coating the contact surfaces. This PCB terminal block is operated with an operating tool. The PCB terminal block is designed for THT soldering. The conductor is designed to be inserted at a 0° angle..

Notes

Variants:	Other colors Other versions (or variants) can be requested from WAGO Sales or configured at https://configurator.wago.com/.

Electrical data

Ratings per IEC/EN 60664-1

Overvoltage category	III	III	II
Pollution degree	3	2	2
Nominal voltage	250 V	320 V	630 V
Rated impulse withstand voltage	4 kV	4 kV	4 kV
Rated current	24 A	24 A	24 A

Approvals per UL 1059

Use group	B	C	D
Rated voltage	300 V	-	300 V
Rated current	10 A	-	10 A

Ratings per CSA

Rated voltage CSA (Use Group B)	300 V
Rated current CSA (Use Group B)	15 A

Connection Data

Clamping units	1
Total number of potentials	1
Number of connection types	1
Number of levels	1

Connection 1

Connection technology	PUSH WIRE®
Actuation type	Operating tool
Solid conductor	0.5 … 2.5 mm² / 20 … 14 AWG
Fine-stranded conductor; with insulated ferrule	0.25 … 1.5 mm²
Fine-stranded conductor; with uninsulated ferrule	0.25 … 1.5 mm²
Strip length	9 … 10 mm / 0.35 … 0.39 inches
Conductor connection direction to PCB	0 °
Pole number	1

Physical data

Pin spacing	5/5.08 mm / 0.197/0.2 inches
Width	6.5 mm / 0.256 inches
Height	12.8 mm / 0.504 inches
Height from the surface	9.2 mm / 0.362 inches
Depth	12.5 mm / 0.492 inches
Solder pin length	3.6 mm
Solder pin dimensions	0.8 x 0.4 mm
Drilled hole diameter	1 $^{(+0.1)}$ mm

PCB contact

PCB contact	THT
Solder pin arrangement	within the terminal block (in-line)
Number of solder pins per potential	2

Continued on next page

Material data

Note (material data)	Information on material specifications can be found here
Color	dark gray
Material group	I
Insulation material (main housing)	Polyamide (PA66)
Flammability class per UL94	V0
Clamping spring material	Chrome-nickel spring steel (CrNi)
Contact material	Electrolytic copper (E_{Cu})
Contact Plating	Tin
Fire load	0.01 MJ
Weight	0.7 g

Environmental requirements

Limit temperature range	-60 … +105 °C

Commercial data

Product Group	4 (Printed Circuit Connectors)
PU (SPU)	800 (100) pcs
Packaging type	Box
Country of origin	CH
GTIN	4044918832373
Customs tariff number	85369010000

Product Classification

UNSPSC	39121409
eCl@ss 10.0	27-44-04-01
eCl@ss 9.0	27-44-04-01
ETIM 9.0	EC002643
ETIM 10.0	EC002643
ECCN	NO US CLASSIFICATION

Environmental Product Compliance

RoHS Compliance Status	Compliant,No Exemption

Approvals / Certificates

General approvals

Approval	Standard	Certificate Name
CCA DEKRA Certification B.V.	EN 60947	NTR NL-7144
CCA DEKRA Certification B.V.	EN 60998	NTR NL 6919
CCA DEKRA Certification B.V.	EN 60947-7-4	NTR NL-7774
CSA DEKRA Certification B.V.	C22.2	1673956
KEMA/KEUR DEKRA Certification B.V.	EN 60947	2160584.38

Declarations of conformity and manufacturer's declarations

Approval	Standard	Certificate Name
EU-Declaration of Conformity WAGO GmbH & Co. KG	-	-
UK-Declaration of Conformity WAGO GmbH & Co. KG	-	-

Continued on next page

Approvals for marine applications



Approval	Standard	Certificate Name
ABS American Bureau of Shipping	-	24-0095975-PDA
DNV DNV GL SE	-	TAE000016Z
PRS Polski Rejestr Statków	-	TE/1095/880590/23

Downloads

Environmental Product Compliance

Compliance Search

Environmental Product Compliance 235-742

Documentation

Additional Information

Technical Section	03.04.2019	pdf 2027.26 KB

CAD/CAE-Data

CAD data

2D/3D Models 235-742

CAE data

EPLAN Data Portal 235-742

ZUKEN Portal 235-742

PCB Design

Symbol and Footprint via SamacSys 235-742

Symbol and Footprint via Ultra Librarian 235-742

Continued on next page

1 Compatible Products

1.1 Required Accessories

1.1.1 End plate

1.1.1.1 End plate



Item No.: 235-500
End plate; snap-fit type; 1 mm thick; black



Item No.: 235-400
End plate; snap-fit type; 1 mm thick; blue



Item No.: 235-200
End plate; snap-fit type; 1 mm thick; dark gray



Item No.: 235-100
End plate; snap-fit type; 1 mm thick; gray



Item No.: 235-300
End plate; snap-fit type; 1 mm thick; light gray



Item No.: 235-700
End plate; snap-fit type; 1 mm thick; light green



Item No.: 235-600
End plate; snap-fit type; 1 mm thick; orange



Item No.: 235-800
End plate; snap-fit type; 1 mm thick; red



Item No.: 235-650
End plate; snap-fit type; 1 mm thick; violet



Item No.: 235-850
End plate; snap-fit type; 1 mm thick; white



Item No.: 235-550
End plate; snap-fit type; 1 mm thick; yellow

1.1.2 Installation

1.1.2.1 Intermediate plate



Item No.: 235-701
Spacer; for doubling the pin spacing; gray

1.2 Optional Accessories

1.2.1 Ferrule

1.2.1.1 Ferrule

Item No.: 216-241
Ferrule; Sleeve for 0.5 mm² / 20 AWG; insulated; electro-tin plated; electrolytic copper; gastight crimped; acc. to DIN 46228, Part 4/09.90; white

Item No.: 216-141
Ferrule; Sleeve for 0.5 mm² / 20 AWG; uninsulated; electro-tin plated; electrolytic copper; gastight crimped; acc. to DIN 46228, Part 1/08.92

Item No.: 216-242
Ferrule; Sleeve for 0.75 mm² / 18 AWG; insulated; electro-tin plated; electrolytic copper; gastight crimped; acc. to DIN 46228, Part 4/09.90; gray

Item No.: 216-142
Ferrule; Sleeve for 0.75 mm² / 18 AWG; uninsulated; electro-tin plated; electrolytic copper; gastight crimped; acc. to DIN 46228, Part 1/08.92

Item No.: 216-243
Ferrule; Sleeve for 1 mm² / AWG 18; insulated; electro-tin plated; electrolytic copper; gastight crimped; acc. to DIN 46228, Part 4/09.90; red

Item No.: 216-143
Ferrule; Sleeve for 1 mm² / AWG 18; uninsulated; electro-tin plated; electrolytic copper; gastight crimped; acc. to DIN 46228, Part 1/08.92



Item No.: 216-244
Ferrule; Sleeve for 1.5 mm² / AWG 16; insulated; electro-tin plated; electrolytic copper; gastight crimped; acc. to DIN 46228, Part 4/09.90; black

Item No.: 216-144
Ferrule; Sleeve for 1.5 mm² / AWG 16; uninsulated; electro-tin plated; electrolytic copper; gastight crimped; acc. to DIN 46228, Part 1/08.92; silver-colored

Continued on next page

1.2.3 Marking

1.2.3.1 Marking strip

Item No.: 210-332/500-202
Marking strips; as a DIN A4 sheet; MARKED; 1-16 (160x); Height of marker strip: 3 mm; Strip length 182 mm; Horizontal marking; Self-adhesive; white

Item No.: 210-332/508-202
Marking strips; as a DIN A4 sheet; MARKED; 1-16 (160x); Height of marker strip: 3 mm; Strip length 182 mm; Horizontal marking; Self-adhesive; white

Item No.: 210-332/500-205
Marking strips; as a DIN A4 sheet; MARKED; 1-32 (80x); Height of marker strip: 3 mm; Strip length 182 mm; Horizontal marking; Self-adhesive; white

Item No.: 210-332/508-205
Marking strips; as a DIN A4 sheet; MARKED; 1-32 (80x); Height of marker strip: 3 mm; Strip length 182 mm; Horizontal marking; Self-adhesive; white

Item No.: 210-332/500-204
Marking strips; as a DIN A4 sheet; MARKED; 17-32 (160x); Height of marker strip: 3 mm; Strip length 182 mm; Horizontal marking; Self-adhesive; white

Item No.: 210-332/508-204
Marking strips; as a DIN A4 sheet; MARKED; 17-32 (160x); Height of marker strip: 3 mm; Strip length 182 mm; Horizontal marking; Self-adhesive; white

Item No.: 210-332/500-206
Marking strips; as a DIN A4 sheet; MARKED; 33-48 (160x); Height of marker strip: 3 mm; Strip length 182 mm; Horizontal marking; Self-adhesive; white

Item No.: 210-332/508-206
Marking strips; as a DIN A4 sheet; MARKED; 33-48 (160x); Height of marker strip: 3 mm; Strip length 182 mm; Horizontal marking; Self-adhesive; white

1.2.4 Tool

1.2.4.1 Operating tool



Item No.: 210-719
Operating tool; Blade: 2.5 x 0.4 mm; with a partially insulated shaft



Item No.: 210-648
Operating tool; Blade: 2.5 x 0.4 mm; with a partially insulated shaft; angled; short



Item No.: 210-647
Operating tool; Blade: 2.5 x 0.4 mm; with a partially insulated shaft; multicoloured

Installation Notes

Conductor termination



Inserting a solid conductor via push-in termination.

Conductor removal



Removing a conductor via screwdriver (2.5 mm blade width).