Data Sheet | Item Number: 235-802

PCB terminal block; 2.5 mm²; Pin spacing 10/10.16 mm; 2-pole; PUSH WIRE®; gray

https://www.wago.com/235-802

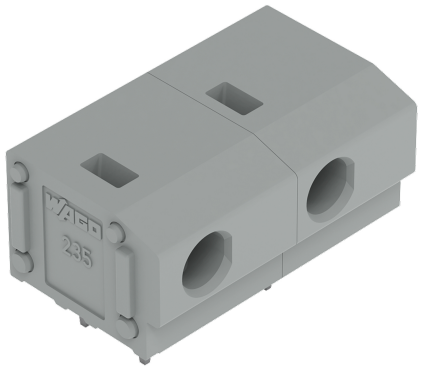



Color: gray

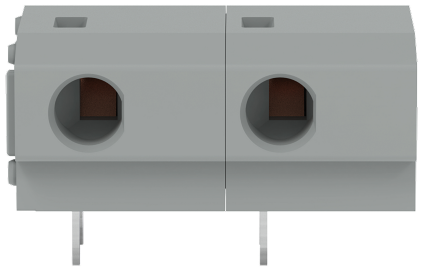



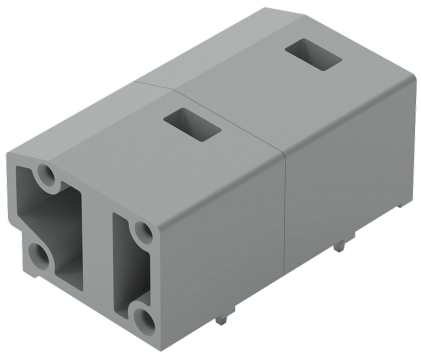

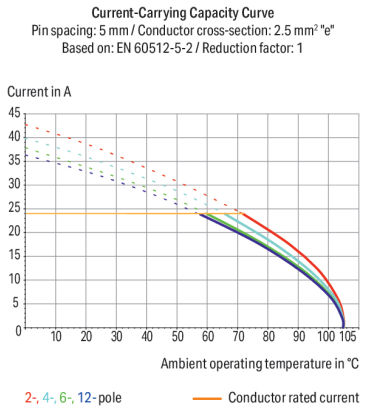

Continued on next page

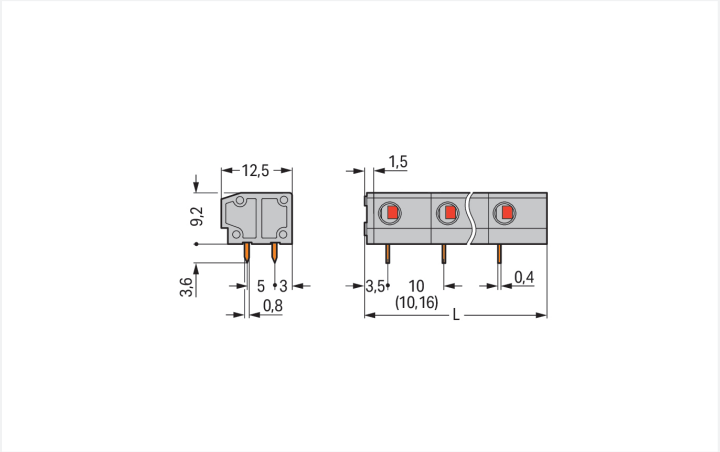

Dimensions in mm
L = (pole no. x pin spacing) + 1.5 mm

PCB terminal block, 235 Series, solder pin dimensions 0.8 x 0.4 mm

Our PCB terminal block (item number 235-802) simplifies electrical installations. It is a universal connector that can be used practically anywhere, e.g., as a pluggable PCB connector, panel feedthrough header, connector for rail-mount terminal blocks, or a floating connector for different mounting methods. Strip lengths must be between 9 and 10 mm when connecting conductors to this PCB terminal block. This product features one conductor terminal and utilizes PUSH WIRE®. Our tried-and-tested PUSH WIRE® connection offers the fastest method for clamping conductors. It utilizes the conductor's stiffness to overcome the clamping spring's contact force. The item's dimensions are (21.5 x 12.8 x 12.5) mm (width x height x depth). Depending on the conductor type, this PCB terminal block is suitable for conductor cross sections ranging from 0.5 mm² to 2.5 mm². The contact surface is coated with tin. This PCB terminal block is operated with an operating tool. The PCB terminal block is designed for THT soldering. Insert the conductor into the board at an angle of 0°..

Notes

Variants:	Other pole numbers Other colors Terminal strips with 7.5/7.62 mm and 10/10.16 mm pin spacing Mixed-color PCB connector strips Direct marking Versions for Ex i Other versions (or variants) can be requested from WAGO Sales or configured at https://configurator.wago.com/.

Electrical data

Ratings per	IEC/EN 60664-1		
Overvoltage category	III	III	II
Pollution degree	3	2	2
Nominal voltage	630 V	1000 V	1000 V
Rated impulse withstand voltage	8 kV	8 kV	8 kV
Rated current	24 A	24 A	24 A

Approvals per	UL 1059		
Use group	B	C	D
Rated voltage	300 V	-	300 V
Rated current	10 A	-	10 A

Ratings per CSA	
Rated voltage CSA (Use Group B)	300 V
Rated current CSA (Use Group B)	15 A

Connection Data

Clamping units	2
Total number of potentials	2
Number of connection types	1
Number of levels	1

Connection 1

Connection technology	PUSH WIRE®
Actuation type	Operating tool
Solid conductor	0.5 … 2.5 mm² / 20 … 14 AWG
Fine-stranded conductor; with insulated ferrule	0.25 … 1.5 mm²
Fine-stranded conductor; with uninsulated ferrule	0.25 … 1.5 mm²
Strip length	9 … 10 mm / 0.35 … 0.39 inches
Conductor connection direction to PCB	0 °
Pole number	2

Physical data

Pin spacing	10/10.16 mm / 0.394/0.4 inches
Width	21.5 mm / 0.846 inches
Height	12.8 mm / 0.504 inches
Height from the surface	9.2 mm / 0.362 inches
Depth	12.5 mm / 0.492 inches
Solder pin length	3.6 mm
Solder pin dimensions	0.8 x 0.4 mm
Drilled hole diameter	1 $^{(+0.1)}$ mm

PCB contact

PCB contact	THT
Solder pin arrangement	over the entire terminal strip (in-line)
Number of solder pins per potential	2

Material data

Note (material data)	Information on material specifications can be found here
Color	gray
Material group	I
Insulation material (main housing)	Polyamide (PA66)
Flammability class per UL94	V0
Clamping spring material	Chrome-nickel spring steel (CrNi)
Contact material	Electrolytic copper (E_{Cu})
Contact Plating	Tin
Fire load	0.041 MJ
Weight	2.1 g

Environmental requirements

Limit temperature range	-60 … +105 °C

Commercial data

Product Group	4 (Printed Circuit Connectors)
PU (SPU)	220 (55) pcs
Packaging type	Box
Country of origin	CN
GTIN	4044918833172
Customs tariff number	85369010000

Product Classification

UNSPSC	39121409
eCl@ss 10.0	27-44-04-01
eCl@ss 9.0	27-44-04-01
ETIM 9.0	EC002643
ETIM 10.0	EC002643
ECCN	NO US CLASSIFICATION

Environmental Product Compliance

RoHS Compliance Status	Compliant,No Exemption

Approvals / Certificates

General approvals

Approval	Standard	Certificate Name
CCA DEKRA Certification B.V.	EN 60947	NTR NL-7144
CCA DEKRA Certification B.V.	EN 60998	NTR NL 6919
CCA DEKRA Certification B.V.	EN 60947-7-4	NTR NL-7774
KEMA/KEUR DEKRA Certification B.V.	EN 60947	2160584.38

Declarations of conformity and manufacturer's declarations

Approval	Standard	Certificate Name
EU-Declaration of Conformity WAGO GmbH & Co. KG	-	-
UK-Declaration of Conformity WAGO GmbH & Co. KG	-	-

Approvals for marine applications

Approval	Standard	Certificate Name
ABS American Bureau of Shipping	-	24-0095975-PDA
DNV DNV GL SE	-	TAE000016Z
PRS Polski Rejestr Statków	-	TE/1095/880590/23

Continued on next page

Downloads

Environmental Product Compliance

Compliance Search

Environmental Product Compliance 235-802

Documentation

Additional Information

Technical Section	03.04.2019	pdf 2027.26 KB

CAD/CAE-Data

CAD data

2D/3D Models 235-802

CAE data

EPLAN Data Portal 235-802

ZUKEN Portal 235-802

PCB Design

Symbol and Footprint via SamacSys 235-802

Symbol and Footprint via Ultra Librarian 235-802

1 Compatible Products

1.1 Optional Accessories

1.1.1 Ferrule

1.1.1.1 Ferrule

Item No.: 216-241
Ferrule; Sleeve for 0.5 mm² / 20 AWG; insulated; electro-tin plated; electrolytic copper; gastight crimped; acc. to DIN 46228, Part 4/09.90; white

Item No.: 216-141
Ferrule; Sleeve for 0.5 mm² / 20 AWG; uninsulated; electro-tin plated; electrolytic copper; gastight crimped; acc. to DIN 46228, Part 1/08.92

Item No.: 216-242
Ferrule; Sleeve for 0.75 mm² / 18 AWG; insulated; electro-tin plated; electrolytic copper; gastight crimped; acc. to DIN 46228, Part 4/09.90; gray

Item No.: 216-142
Ferrule; Sleeve for 0.75 mm² / 18 AWG; uninsulated; electro-tin plated; electrolytic copper; gastight crimped; acc. to DIN 46228, Part 1/08.92

Item No.: 216-243
Ferrule; Sleeve for 1 mm² / AWG 18; insulated; electro-tin plated; electrolytic copper; gastight crimped; acc. to DIN 46228, Part 4/09.90; red

Item No.: 216-143
Ferrule; Sleeve for 1 mm² / AWG 18; uninsulated; electro-tin plated; electrolytic copper; gastight crimped; acc. to DIN 46228, Part 1/08.92

Item No.: 216-244
Ferrule; Sleeve for 1.5 mm² / AWG 16; insulated; electro-tin plated; electrolytic copper; gastight crimped; acc. to DIN 46228, Part 4/09.90; black

Item No.: 216-144
Ferrule; Sleeve for 1.5 mm² / AWG 16; uninsulated; electro-tin plated; electrolytic copper; gastight crimped; acc. to DIN 46228, Part 1/08.92; silver-colored

Item No.: 216-246
Ferrule; Sleeve for 2.5 mm² / AWG 14; insulated; electro-tin plated; electrolytic copper; gastight crimped; acc. to DIN 46228, Part 4/09.90; blue

Item No.: 216-106
Ferrule; Sleeve for 2.5 mm² / AWG 14; uninsulated; electro-tin plated; silver-colored

Item No.: 216-207
Ferrule; Sleeve for 4 mm² / AWG 12; insulated; electro-tin plated; gray

Item No.: 216-107
Ferrule; Sleeve for 4 mm² / AWG 12; uninsulated; electro-tin plated

Continued on next page

Installation Notes

Conductor termination



Inserting a solid conductor via push-in termination.

Conductor removal

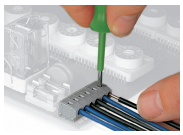

Removing a conductor via screwdriver (2.5 mm blade width).