Data Sheet | Item Number: 235-851/332-000

Stackable 2-conductor PCB terminal block; push-button; 0.75 mm²; Pin spacing 10/10.16 mm; 1-pole; PUSH WIRE®; with test port; gray

https://www.wago.com/235-851/332-000



Color: gray

Similar to illustration

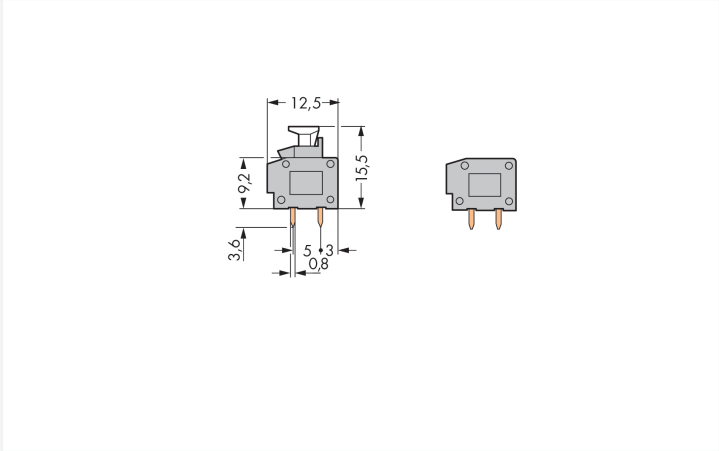

Dimensions in mm

PCB terminal block, 235 Series, with 10 mm pin spacing

Our PCB terminal block (item number 235-851/332-000) makes connecting wires quick and easy. It offers the flexibility needed for different mounting types. Strip lengths must be between 9 and 10 mm when connecting conductors to this PCB terminal block. This product incorporates one conductor terminal and utilizes PUSH WIRE®. Our PUSH WIRE® connection uses the stiffness of the conductor to overcome the clamping spring's contact force, allowing you to clamp the conductor in place more quickly and easily. The item's dimensions are (11.5 x 19.1 x 12.5) mm (width x height x depth). Depending on the type of conductor, this PCB terminal block is ideal for conductor cross sections ranging from 0.2 mm² to 0.75 mm². Tin is used for coating the contact surfaces. This PCB terminal block is operated with a push-button. THT is used to solder the PCB terminal block. Insert the conductor at an angle of 0°..

Notes

Variants:	Other colors Other versions (or variants) can be requested from WAGO Sales or configured at https://configurator.wago.com/.

Electrical data

Ratings per	IEC/EN 60664-1		
Overvoltage category	III	III	II
Pollution degree	3	2	2
Nominal voltage	630 V	500 V	1000 V
Rated impulse withstand voltage	8 kV	6 kV	6 kV
Rated current	10 A	10 A	10 A

Approvals per	CSA		
Use group	B	C	D
Rated voltage	300 V	-	-
Rated current	10 A	-	-

Approvals per	UL 1059		
Use group	B	C	D
Rated voltage	300 V	-	300 V
Rated current	10 A	-	10 A

Connection Data

Clamping units	2
Total number of potentials	1
Number of connection types	1
Number of levels	1

Connection 1

Connection technology	PUSH WIRE®
Actuation type	Push-button
Solid conductor	0.2 … 0.75 mm² / 24 … 18 AWG
Strip length	9 … 10 mm / 0.35 … 0.39 inches
Conductor connection direction to PCB	0 °
Pole number	1

Physical data

Pin spacing	10/10.16 mm / 0.394/0.4 inches
Width	11.5 mm / 0.453 inches
Height	19.1 mm / 0.752 inches
Height from the surface	15.5 mm / 0.61 inches
Depth	12.5 mm / 0.492 inches
Solder pin length	3.6 mm
Solder pin dimensions	0.8 x 0.4 mm
Drilled hole diameter	1 $^{(+0.1)}$ mm

PCB contact

PCB contact	THT
Solder pin arrangement	within the terminal block (in-line)
Number of solder pins per potential	2

Material data

Note (material data)	Information on material specifications can be found here
Color	gray
Material group	I
Insulation material (main housing)	Polyamide (PA66)
Flammability class per UL94	V0
Clamping spring material	Chrome-nickel spring steel (CrNi)
Contact material	Electrolytic copper (E_{Cu})
Contact Plating	Tin
Fire load	0.021 MJ
Weight	1 g

Environmental requirements

Limit temperature range	-60 … +105 °C

Commercial data

Product Group	4 (Printed Circuit Connectors)
PU (SPU)	400 (100) pcs
Packaging type	Box
Country of origin	CN
GTIN	4044918833769
Customs tariff number	85369010000

Product Classification

UNSPSC	39121409
eCl@ss 10.0	27-44-04-01
eCl@ss 9.0	27-44-04-01
ETIM 9.0	EC002643
ETIM 10.0	EC002643
ECCN	NO US CLASSIFICATION

Environmental Product Compliance

RoHS Compliance Status	Compliant,No Exemption

Approvals / Certificates

General approvals

Approval	Standard	Certificate Name
CSA DEKRA Certification B.V.	C22.2	1673956

Downloads

Environmental Product Compliance

Compliance Search

Environmental Product Compliance 235-851/332-000

Documentation

Additional Information

Technical Section	03.04.2019	pdf 2027.26 KB

CAD/CAE-Data

CAE data

EPLAN Data Portal 235-851/332-000

PCB Design

Symbol and Footprint via SamacSys 235-851/332-000

Symbol and Footprint via Ultra Librarian 235-851/332-000

Continued on next page

1 Compatible Products

1.1 Required Accessories

1.1.1 End plate

1.1.1.1 End plate



Item No.: 235-100
End plate; snap-fit type; 1 mm thick; gray

1.2 Optional Accessories

1.2.1 Ferrule

1.2.1.1 Ferrule

Item No.: 216-241
Ferrule; Sleeve for 0.5 mm² / 20 AWG; insulated; electro-tin plated; electrolytic copper; gastight crimped; acc. to DIN 46228, Part 4/09.90; white

Item No.: 216-141
Ferrule; Sleeve for 0.5 mm² / 20 AWG; uninsulated; electro-tin plated; electrolytic copper; gastight crimped; acc. to DIN 46228, Part 1/08.92

Item No.: 216-242
Ferrule; Sleeve for 0.75 mm² / 18 AWG; insulated; electro-tin plated; electrolytic copper; gastight crimped; acc. to DIN 46228, Part 4/09.90; gray

Item No.: 216-142
Ferrule; Sleeve for 0.75 mm² / 18 AWG; uninsulated; electro-tin plated; electrolytic copper; gastight crimped; acc. to DIN 46228, Part 1/08.92

Item No.: 216-243
Ferrule; Sleeve for 1 mm² / AWG 18; insulated; electro-tin plated; electrolytic copper; gastight crimped; acc. to DIN 46228, Part 4/09.90; red

Item No.: 216-143
Ferrule; Sleeve for 1 mm² / AWG 18; uninsulated; electro-tin plated; electrolytic copper; gastight crimped; acc. to DIN 46228, Part 1/08.92



Item No.: 216-244
Ferrule; Sleeve for 1.5 mm² / AWG 16; insulated; electro-tin plated; electrolytic copper; gastight crimped; acc. to DIN 46228, Part 4/09.90; black

Item No.: 216-144
Ferrule; Sleeve for 1.5 mm² / AWG 16; uninsulated; electro-tin plated; electrolytic copper; gastight crimped; acc. to DIN 46228, Part 1/08.92; silver-colored



Item No.: 216-246
Ferrule; Sleeve for 2.5 mm² / AWG 14; insulated; electro-tin plated; electrolytic copper; gastight crimped; acc. to DIN 46228, Part 4/09.90; blue



Item No.: 216-106
Ferrule; Sleeve for 2.5 mm² / AWG 14; uninsulated; electro-tin plated; silver-colored



Item No.: 216-207
Ferrule; Sleeve for 4 mm² / AWG 12; insulated; electro-tin plated; gray



Item No.: 216-107
Ferrule; Sleeve for 4 mm² / AWG 12; uninsulated; electro-tin plated

Installation Notes

Installation

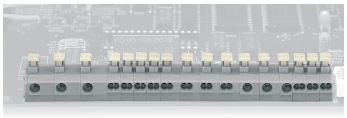

Combining 1- and 2-conductor terminal blocks with different pin spacing.