Data Sheet | Item Number: 236-602/000-009/999-950

PCB terminal block; 2.5 mm²; Pin spacing 10/10.16 mm; 2-pole; suitable for Ex-e applications; CAGE CLAMP®; commoning option; 2,50 mm²; light gray

https://www.wago.com/236-602/000-009/999-950



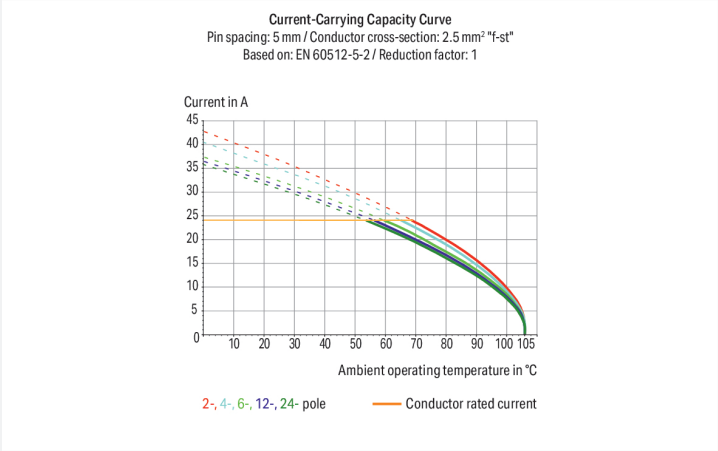

Color: light gray

Similar to illustration

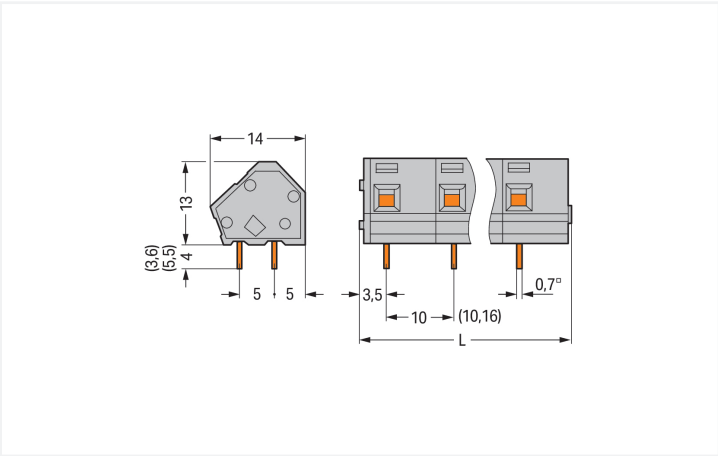

Dimensions in mm
L = (pole no. x pin spacing) + 2.3 mm

PCB terminal block, 236 Series, with 10 mm pin spacing

Our PCB terminal block (item number 236-602/000-009/999-950) simplifies electrical installations. It is a universal connector that can be used practically anywhere, for example, as a pluggable PCB connector, panel feedthrough header, connector for rail-mount terminal blocks, or a floating connector for different mounting methods. Conductors should only be connected to this PCB terminal block if their strip length is between 5 and 6 mm . Featuring one conductor terminal along with CAGE CLAMP®, this connector outperforms the competition. Our celebrated universal connection known as CAGE CLAMP® is the industry standard when it comes to connection technology and electrical interconnections. Dimensions: (22.3 x 17 x 14) mm (width x height x depth). Depending on the conductor type, this PCB terminal block is designed for conductor cross sections ranging from 0.08 mm² to 2.5 mm².

Tin is used for coating the contact surfaces. This PCB terminal block is operated with an operating tool. The PCB terminal block is designed for THT soldering. The conductor is designed to be inserted into the board at a 45° angle..

Notes

Variants:	Other pole numbers Direct marking Other versions (or variants) can be requested from WAGO Sales or configured at https://configurator.wago.com/.

Electrical data

Ex information

Ratings per	ATEX: PTB 06 ATEX 1061 U / IECEx: PTB 06.0042 U
Rated voltage EN (Ex e II)	440 V
Rated current (Ex e II)	16 A

Connection Data

Clamping units	2
Total number of potentials	2
Number of connection types	1
Number of levels	1

Connection 1

Connection technology	CAGE CLAMP®
Actuation type	Operating tool
Solid conductor	0.08 … 2.5 mm² / 28 … 12 AWG
Fine-stranded conductor	0.08 … 2.5 mm² / 28 … 12 AWG
Fine-stranded conductor; with insulated ferrule	0.25 … 1.5 mm²
Fine-stranded conductor; with uninsulated ferrule	0.25 … 1.5 mm²
Note (conductor cross-section)	12 AWG: THHN, THWN
Strip length	5 … 6 mm / 0.2 … 0.24 inches
Conductor connection direction to PCB	45 °
Pole number	2

Physical data

Pin spacing	10/10.16 mm / 0.394/0.4 inches
Width	22.3 mm / 0.878 inches
Height	17 mm / 0.669 inches
Height from the surface	13 mm / 0.512 inches
Depth	14 mm / 0.551 inches
Solder pin length	4 mm
Solder pin dimensions	0.7 x 0.7 mm
Drilled hole diameter	1.1 $^{(+0.1)}$ mm

PCB contact

PCB contact	THT
Solder pin arrangement	over the entire terminal strip (in-line)
Number of solder pins per potential	2

Continued on next page

Material data

Note (material data)	Information on material specifications can be found here
Color	light gray
Material group	I
Insulation material (main housing)	Polyamide (PA66)
Flammability class per UL94	V0
Clamping spring material	Chrome-nickel spring steel (CrNi)
Contact material	Electrolytic copper (E_{Cu})
Contact Plating	Tin
Fire load	0.048 MJ
Weight	2.7 g

Environmental requirements

Limit temperature range	-60 … +105 °C

Commercial data

Product Group	4 (Printed Circuit Connectors)
PU (SPU)	200 (50) pcs
Packaging type	Box
Country of origin	CH
GTIN	4044918773089
Customs tariff number	85369010000

Product Classification

UNSPSC	39121409
eCl@ss 10.0	27-44-04-01
eCl@ss 9.0	27-44-04-01
ETIM 9.0	EC002643
ETIM 10.0	EC002643
ECCN	NO US CLASSIFICATION

Environmental Product Compliance

RoHS Compliance Status	Compliant,No Exemption

Approvals / Certificates

General approvals

Approval	Standard	Certificate Name
CSA DEKRA Certification B.V.	C22.2 No. 158	1673957
UL Underwriters Laboratories Inc.	UL 1059	UL-US-2406095-1

Declarations of conformity and manufacturer's declarations

Approval	Standard	Certificate Name
ATEX-Attestation of Conformity WAGO GmbH & Co. KG	-	-

Continued on next page

Approvals for hazardous areas



Approval	Standard	Certificate Name
ATEX Physikalisch Technische Bundesanstalt (PTB)	EN 60079	PTB 06 Atex 1061 U (II 2 G Ex eb IIC Gb bzw. I M 2 Ex eb I Mb)
CCC CNEX	GB/T 3836.3	2020312313000274 (Ex eb IIC Gb, Ex eb I Mb)
IECEx Physikalisch Technische Bundesanstalt	IEC 60079	IECEx PTB 06.0042U (Ex eb IIC GB or Ex eb I Mb)

Downloads

Environmental Product Compliance

Compliance Search

Documentation

Additional Information

Technical Section	03.04.2019	pdf 2027.26 KB	
Gebrückte Klemmenleisten für Leiterplatten		pdf 303.71 KB	

CAD/CAE-Data

CAD data

CAE data

PCB Design

Continued on next page

1 Compatible Products

1.1 Optional Accessories

1.1.1 Ferrule

1.1.1.1 Ferrule



Item No.: 216-321
Ferrule; Sleeve for 0.25 mm² / AWG 24; insulated; electro-tin plated; yellow



Item No.: 216-151
Ferrule; Sleeve for 0.25 mm² / AWG 24; uninsulated; electro-tin plated; silver-colored

Item No.: 216-322
Ferrule; Sleeve for 0.34 mm² / 22 AWG; insulated; electro-tin plated; light turquoise



Item No.: 216-152
Ferrule; Sleeve for 0.34 mm² / 22 AWG; uninsulated; electro-tin plated; silver-colored

Item No.: 216-221
Ferrule; Sleeve for 0.5 mm² / 20 AWG; insulated; electro-tin plated; white



Item No.: 216-121
Ferrule; Sleeve for 0.5 mm² / AWG 22; uninsulated; electro-tin plated; silver-colored

Item No.: 216-222
Ferrule; Sleeve for 0.75 mm² / 18 AWG; insulated; electro-tin plated; gray



Item No.: 216-122
Ferrule; Sleeve for 0.75 mm² / 18 AWG; uninsulated; electro-tin plated; silver-colored

Item No.: 216-223
Ferrule; Sleeve for 1 mm² / AWG 18; insulated; electro-tin plated; red



Item No.: 216-123
Ferrule; Sleeve for 1 mm² / AWG 18; uninsulated; electro-tin plated; silver-colored



Item No.: 216-224
Ferrule; Sleeve for 1.5 mm² / AWG 16; insulated; electro-tin plated; black



Item No.: 216-124
Ferrule; Sleeve for 1.5 mm² / AWG 16; uninsulated; electro-tin plated

1.1.2 Marking

1.1.2.1 Marking strip



Item No.: 210-332/1000-202
Marking strips; as a DIN A4 sheet; MARKED; 1-16 (80x); Height of marker strip: 3 mm; Strip length 182 mm; Horizontal marking; Self-adhesive; white



Item No.: 210-332/1016-202
Marking strips; as a DIN A4 sheet; MARKED; 1-16 (80x); Height of marker strip: 3 mm; Strip length 182 mm; Horizontal marking; Self-adhesive; white



Item No.: 210-332/1000-204
Marking strips; as a DIN A4 sheet; MARKED; 17-31 (80x); Height of marker strip: 3 mm; Strip length 182 mm; Horizontal marking; Self-adhesive; white



Item No.: 210-332/1016-204
Marking strips; as a DIN A4 sheet; MARKED; 17-31 (80x); Height of marker strip: 3 mm; Strip length 182 mm; Horizontal marking; Self-adhesive; white



Item No.: 210-332/1000-206
Marking strips; as a DIN A4 sheet; MARKED; 33-48 (80x); Height of marker strip: 3 mm; Strip length 182 mm; Horizontal marking; Self-adhesive; white



Item No.: 210-332/1016-206
Marking strips; as a DIN A4 sheet; MARKED; 33-48 (80x); Height of marker strip: 3 mm; Strip length 182 mm; Horizontal marking; Self-adhesive; white

1.1.3 Stickers with operating instructions

1.1.3.1 Stickers with operating instructions



Item No.: 210-191
Stickers for operating instructions; for PCB terminal blocks; 236 Series

 Continued on next page

1.1.4 Tool

1.1.4.1 Operating tool



Item No.: 210-658
Operating tool; Blade: 3.5 x 0.5 mm; with a partially insulated shaft; angled; short; multicoloured



Item No.: 210-720
Operating tool; Blade: 3.5 x 0.5 mm; with a partially insulated shaft; multicoloured



Item No.: 210-657
Operating tool; Blade: 3.5 x 0.5 mm; with a partially insulated shaft; short; multicoloured



Item No.: 236-335
Operating tool; gray



Item No.: 236-332
Operating tool; natural

Installation Notes

Conductor termination

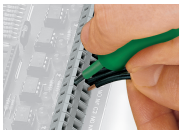

Inserting a conductor via 3.5 mm screwdriver.
Screwdriver actuation parallel to conductor entry

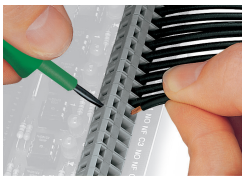

Inserting a conductor via 3.5 mm screwdriver.
Screwdriver actuation perpendicular to conductor entry

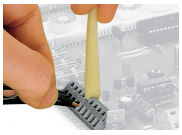

Inserting a conductor via operating tool.



Compared to standard screwdrivers, these operating tools are far more convenient for wiring PCB terminal strips at factory.

Installation



PCB Terminal Strips placed behind each other save space – staggering them by half the pin spacing simplifies subsequent wiring of the first row.

Installation

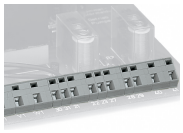

Combining PCB terminal blocks with different pin spacing.

Marking



Optional: Labeling via factory direct marking.



Optional: Labeling with self-adhesive marking strips possible