Data Sheet | Item Number: 252-108

2-conductor female connector; push-button; PUSH WIRE®; 0.8 mm Ø; Pin spacing 3.5 mm; 8-pole; for solder pin strip; gray

https://www.wago.com/252-108

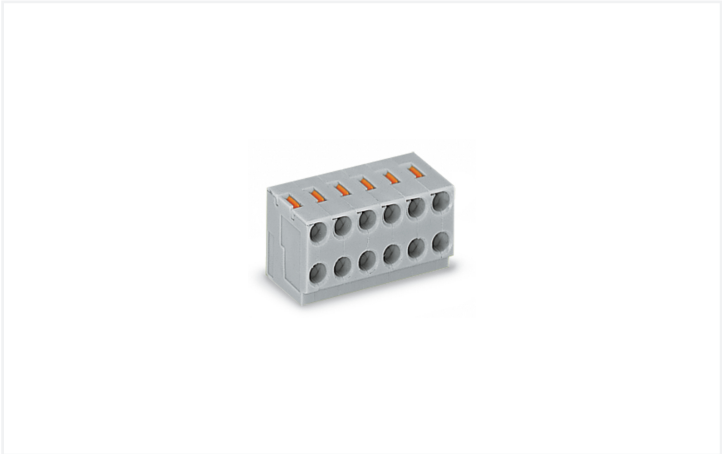

Color: gray

Similar to illustration

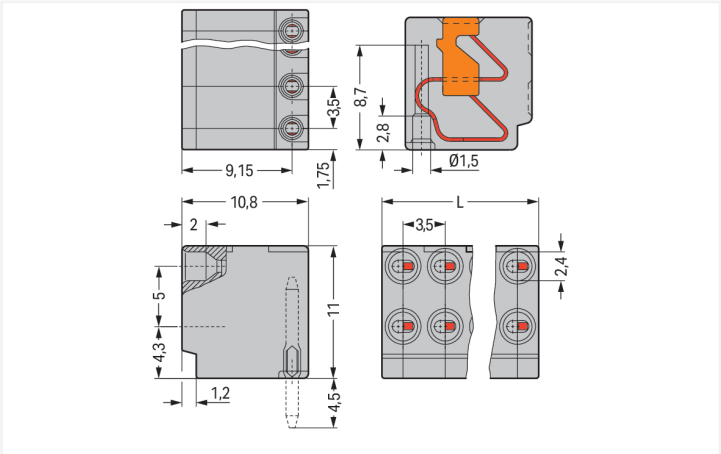

Dimensions in mm
L = pole no. x pin spacing

Pluggable pcb terminal block, 252 Series, PUSH WIRE®

Our pluggable pcb terminal block (item number 252-108) is designed for seamless electrical installations. Ensure that the strip lengths are between 6 and 7 mm when connecting conductors to pluggable pcb terminal block. Featuring one conductor terminal along with PUSH WIRE®, this connector is highly versatile. Our reliable PUSH WIRE® connection offers the fastest method for clamping conductors. It utilizes the conductor's stiffness to overcome the clamping spring's contact force. Dimensions: (28 x 11 x 10.5) mm (width x height x depth). Pluggable pcb terminal block is suitable for conductor cross sections ranging from 0.14 mm² to 0.5 mm². The contact surface is coated with tin.

Notes

Variants:	Other pole numbers Direct marking Other versions (or variants) can be requested from WAGO Sales or configured at https://configurator.wago.com/.

Electrical data

Ratings per	IEC/EN 60664-1		
Overvoltage category	III	III	II
Pollution degree	3	2	2
Nominal voltage	320 V	320 V	630 V
Rated impulse withstand voltage	4 kV	4 kV	4 kV
Rated current	2 A	2 A	2 A

Approvals per	UL 1059		
Use group	B	C	D
Rated voltage	300 V	-	300 V
Rated current	2 A	-	2 A

Connection Data

Clamping units	16
Total number of potentials	8
Number of connection types	1
Number of levels	1

Connection 1

Connection technology	PUSH WIRE®
Actuation type	Push-button
Solid conductor	0.14 … 0.5 mm² / 26 … 20 AWG
Conductor diameter	0.4 … 0.8 mm / 26 … 20 AWG
Strip length	6 … 7 mm / 0.24 … 0.28 inches
Conductor connection direction to PCB	0 °

Connection 1

Pole number	8

Physical data

Pin spacing	3.5 mm / 0.138 inches
Width	28 mm / 1.102 inches
Height	11 mm / 0.433 inches
Depth	10.5 mm / 0.413 inches

Plug-in connection

Contact type (pluggable connector)	Female connector/socket
Connector (connection type)	for PCB
Plugging without loss of pin spacing	Yes
Mating direction to the rail-mount terminal block	90 °

Material data

Note (material data)	Information on material specifications can be found here
Color	gray
Material group	I
Insulation material (main housing)	Polyamide (PA66)
Flammability class per UL94	V0
Clamping spring material	Copper alloy
Contact material	Electrolytic copper (E_{Cu})
Contact Plating	Tin
Fire load	0.063 MJ
Weight	4.1 g

Environmental requirements

Limit temperature range	-60 … +105 °C

Commercial data

Product Group	4 (Printed Circuit Connectors)
PU (SPU)	200 (50) pcs
Packaging type	Box
Country of origin	PL
GTIN	4045454039769
Customs tariff number	85366990990

Product Classification

UNSPSC	39121409
eCl@ss 10.0	27-44-04-01
eCl@ss 9.0	27-44-04-01
ETIM 9.0	EC002643
ETIM 10.0	EC002643
ECCN	NO US CLASSIFICATION

Continued on next page

Environmental Product Compliance

RoHS Compliance Status	Compliant,No Exemption

Approvals / Certificates

General approvals

Approval	Standard	Certificate Name
CCA DEKRA Certification B.V.	EN 60947	NTR NL-7110
CCA DEKRA Certification B.V.	EN 60947-7-4	NTR NL-7320
cURus Underwriters Laboratories Inc.	UL 1059	E45172
ENEC DEKRA Certification B.V.	EN 60947	2160584.26

Declarations of conformity and manufacturer's declarations

Approval	Standard	Certificate Name
EU-Declaration of Conformity WAGO GmbH & Co. KG	-	-
UK-Declaration of Conformity WAGO GmbH & Co. KG	-	-

Downloads

Environmental Product Compliance

Compliance Search

Environmental Product Compliance 252-108

Documentation

Additional Information

Technical Section	03.04.2019	pdf 2027.26 KB

CAD/CAE-Data

CAD data

2D/3D Models 252-108

CAE data

EPLAN Data Portal 252-108

ZUKEN Portal 252-108

PCB Design

Symbol and Footprint via SamacSys 252-108

Symbol and Footprint via Ultra Librarian 252-108

 Continued on next page

1 Compatible Products

1.1 System counterpart

1.1.1 Solder pin



Item No.: 243-131
THT single pin; silver-colored

1.2 Required Accessories

1.2.1 Male connector

1.2.1.1 Solder pin



Item No.: 243-131
THT single pin; silver-colored

1.3 Optional Accessories

1.3.1 Marking

1.3.1.1 Marking strip



Item No.: 210-332/350-202
Marking strips; as a DIN A4 sheet; MARKED; 1-16 (240x); Height of marker strip: 3 mm; Strip length 182 mm; Horizontal marking; Self-adhesive; white



Item No.: 210-332/350-204
Marking strips; as a DIN A4 sheet; MARKED; 17-32 (240x); Height of marker strip: 3 mm; Strip length 182 mm; Horizontal marking; Self-adhesive; white



Item No.: 210-332/350-206
Marking strips; as a DIN A4 sheet; MARKED; 33-48 (240x); Height of marker strip: 3 mm; Strip length 182 mm; Horizontal marking; Self-adhesive; white

1.3.2 Tool

1.3.2.1 Operating tool



Item No.: 210-719
Operating tool; Blade: 2.5 x 0.4 mm; with a partially insulated shaft



Item No.: 210-647
Operating tool; Blade: 2.5 x 0.4 mm; with a partially insulated shaft; multicoloured

Installation Notes

Conductor removal

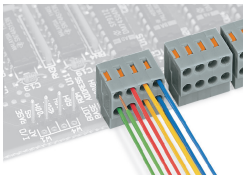

Conductor termination directly on the PCB or wiring prior to mounting on PCB – 252 Series

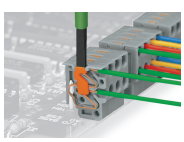

Removing a conductor – 252 Series

Continued on next page

Installation

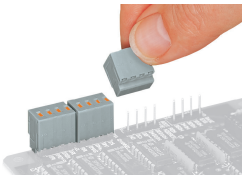

Plugging a compact PCB connector – 252 Series